KLEIN®

Sistema de puertas correderas con detención suave
Sliding doors with soft closing system
Système de porte coulissantes avec freinage contrôlé
Schiebetürsystem mit sanftem Schließen

LITE GLASS+

Interiorismo Vidrio
Interior Design Glass
Decóration d'Intérieur Verre
Innenarchitektur Glas

LITE GLASS+

SILVER

LITE GLASS+ T

BLACK

LITE GLASS+ TOP

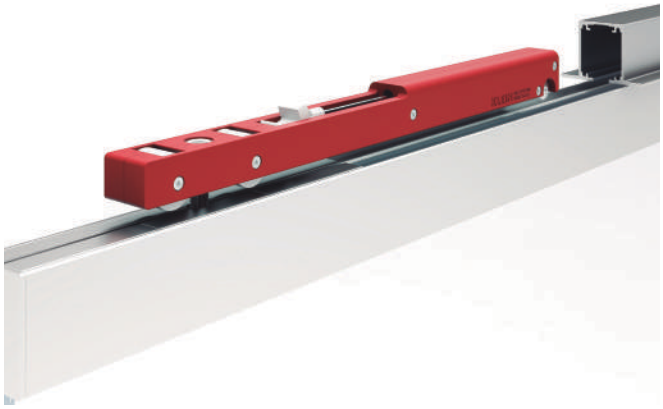

KSC

ESP

LITE GLASS+: sistema para puerta única corredera o para aplicaciones de puertas paralelas, de vidrio. Puede ser instalado a pared o a techo, con perfil empotrado o visto. Ideal en aplicaciones para armarios y puertas de paso.

- Nueva versión LITE+ T empotrada a falso techo y totalmente oculta. Una vez instalada, solo se percibe una fina línea de sombra en el techo.
- Instalación empotrada o instalación a pared o a techo con perfil y galería vistos.
- Montaje rápido e intuitivo para una ejecución eficiente:
  - Acceso directo al mecanismo de frenado y al sistema de regulación.
  - Sistema empotrado a falso techo: montaje en dos fases para una instalación fácil.
- Ausencia de rieles en el suelo para liberar la zona de paso.
- Vidrio de 10 o 12 mm, hasta 100 Kg.
- Perfil y galería embellecedora de aluminio anodizado Silver, Negro y Bronce.
- Cierre suave y sin golpes.
- Garantía KLEIN® 5 años.
- Sistema de frenado de la puerta: KSC, Klein Soft Closing, detención suave controlada. Sistema opcional.

Nuestros amortiguadores hidráulicos de última generación y muelles múltiples aseguran un funcionamiento óptimo. Admite hojas de más de 75 cm.

ENG

LITE GLASS+: system for a single sliding glass door, or for applications with bi passing glass doors. It can be installed on a wall or ceiling, with a recessed or exposed profile. Ideal for applications involving wardrobes or access doors.

- New version LITE+ T invisible and recessed in false ceilings. Once installed, only a thin shadow line is visible on the ceiling.
- Recessed installation, or installation on a wall or ceiling with exposed profile and valance.
- Fast and intuitive assembly for efficient implementation:
  - Direct access to the braking mechanism and the adjustment system.
  - System embedded in drop ceiling: two-phase assembly for easy installation.
- Absence of floor tracks, leaving a clear walking area.
- 10 or 12 mm glass, weighing up to 100 kg.
- Silver, Black and Bronze anodised aluminium profiles and valances.
- Smooth closing, with no slamming.
- Five-year KLEIN® warranty.
- Soft closing system: KSC, Klein Soft Closing, smooth controlled closing. Optional system.

Our cutting-edge hydraulic dampers with multiple springs ensure optimum performance. Allows for panes starting at 75 cm.

FRA

LITE GLASS+: système pour portes coulissantes vitrées à un seul vantail ou pour application de portes vitrées parallèles. Le rail peut être installé au mur ou au plafond, encastré ou apparent. Un choix parfait pour les portes intérieures et les penderies.

- Nouvelle version LITE+ T invisible et encastrée dans le faux plafond. Une fois installée, seule une fine ligne d'ombre est visible au plafond.
- Installation encastrée ou installation en applique au mur ou au plafond, avec bandeau.
- Montage rapide et intuitif pour une mise en place efficace:
  - Accès direct au mécanisme de freinage et au dispositif de réglage.
  - Système encastré dans le faux plafond : montage en deux étapes pour une installation aisée.
- Absence de rail au sol pour une voie de passage libre d'obstacles.
- Verre de 10 ou 12 mm, jusqu'à 100 Kg par vantail coulissant.
- Rail et bandeau en aluminium anodisé Silver, Noir ou Bronze.
- Fermeture en douceur, garantie sans heurts.
- Garantie KLEIN® 5 ans.
- Mécanisme de freinage de la porte: KSC, Klein Soft Closing, Freinage contrôlé, en douceur. En option.

Nos amortisseurs hydrauliques de dernière génération à ressorts multiples assurent un fonctionnement optimal. Largeur du vantail: à partir de 75 cm.

DEU

LITE GLASS+: System für eine Schiebetür oder für Ausführungen mit parallelen Türen, aus Glas. Montage an der Wand oder an der Decke, mit eingebautem oder sichtbarem Profil. Ideal für Schränke und Durchgangstüren.

- Es gibt verschiedene Optionen für die Montage: eingebaut sowie an der Wand oder an der Decke mit Profil und sichtbarer Führungsabdeckung.
- Einfache und intuitive Montage für eine effiziente Funktion.
  - Direkter Zugriff auf den Bremsmechanismus und das Einstellsystem.
  - System für den Einbau in Zwischendecke: Montage in zwei Phasen für den einfachen Einbau.
- Ohne Führungen am Boden für einen barrierefreien Durchgangsbereich.
- 10 mm und 12 mm Glasscheibe bis 100 kg.
- Profil und Führungsabdeckung aus eloxiertem Aluminium Silver, Schwarz und Bronze.
- Garantiert sanftes Schließen ohne Stöße.
- Garantie von KLEIN® 5 Jahre.
- Bremssystem der Tür: KSC, Klein Soft Closing, sanftes, kontrolliertes Bremsen. Optionales System.

Unsere hochmodernen hydraulischen Stoßdämpfer und Mehrfachfedern garantieren eine optimale Funktion. Für Türflügel mit einer Breite über 75 cm.

LITE GLASS +

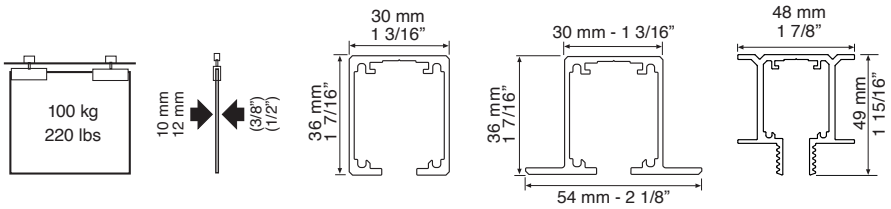

LITE GLASS+

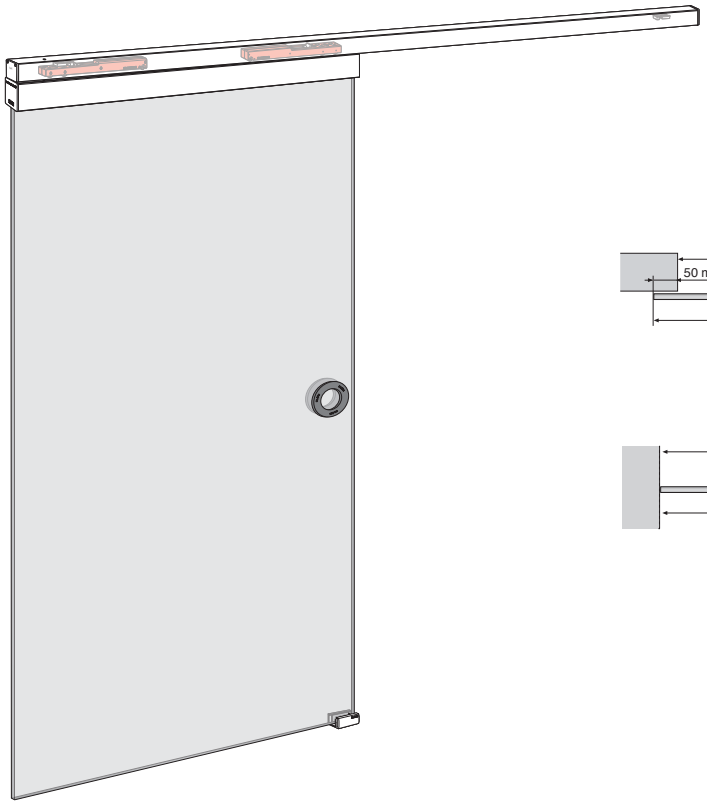

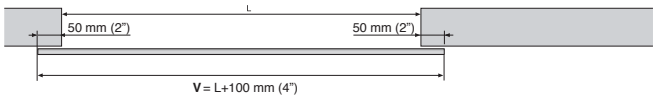

V ≥ 750 mm (29 1/2")

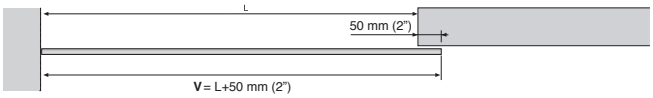

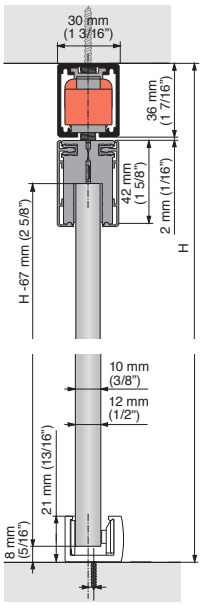

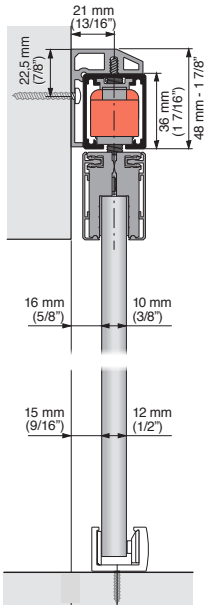

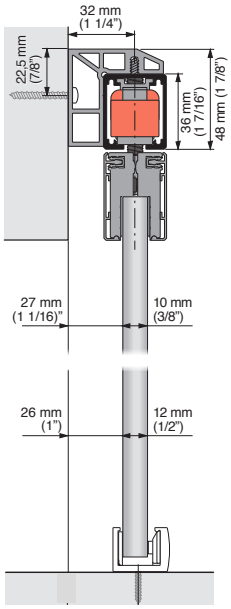

LITE GLASS+ TOP

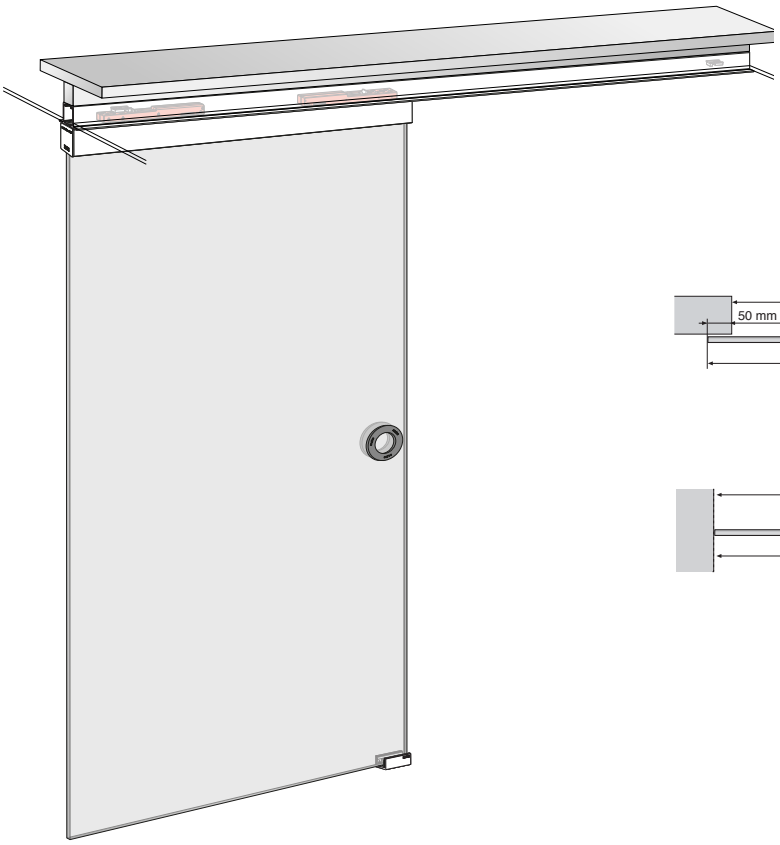

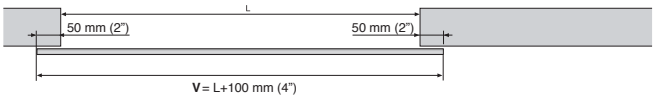

V ≥ 750 mm (29 1/2")

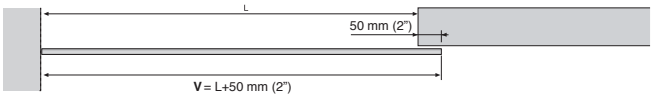

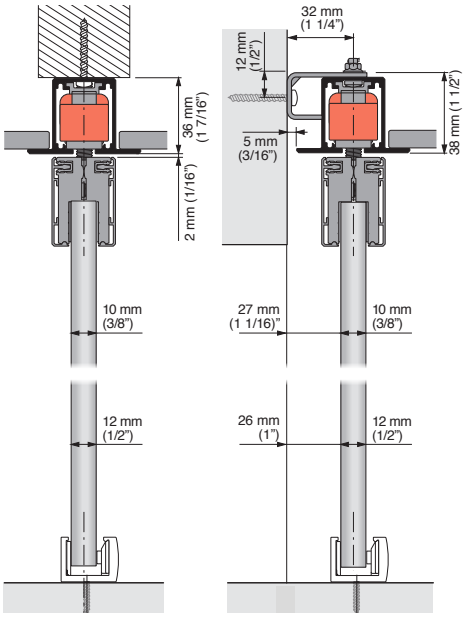

LITE GLASS+ T

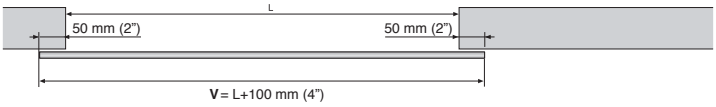

V ≥ 750 mm (29 1/2”)

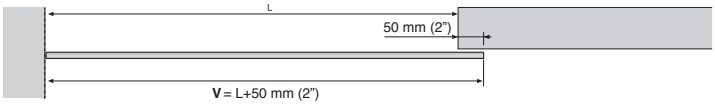

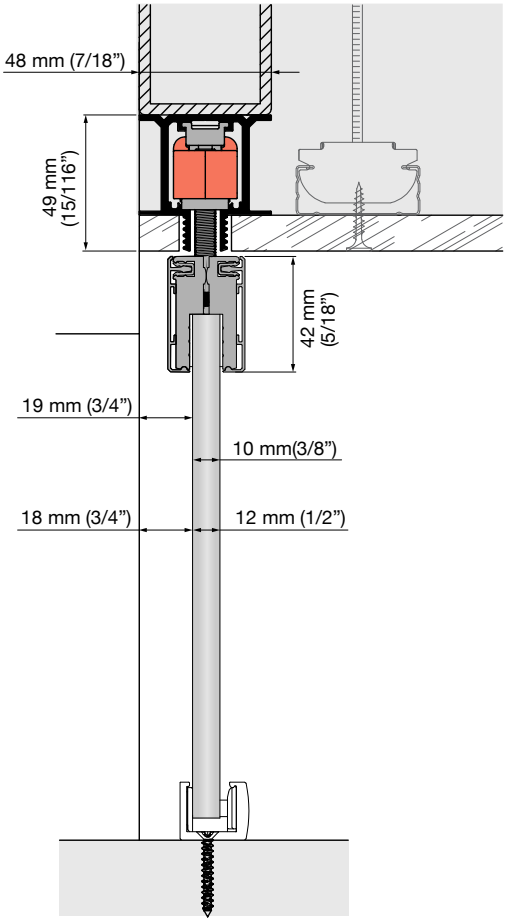

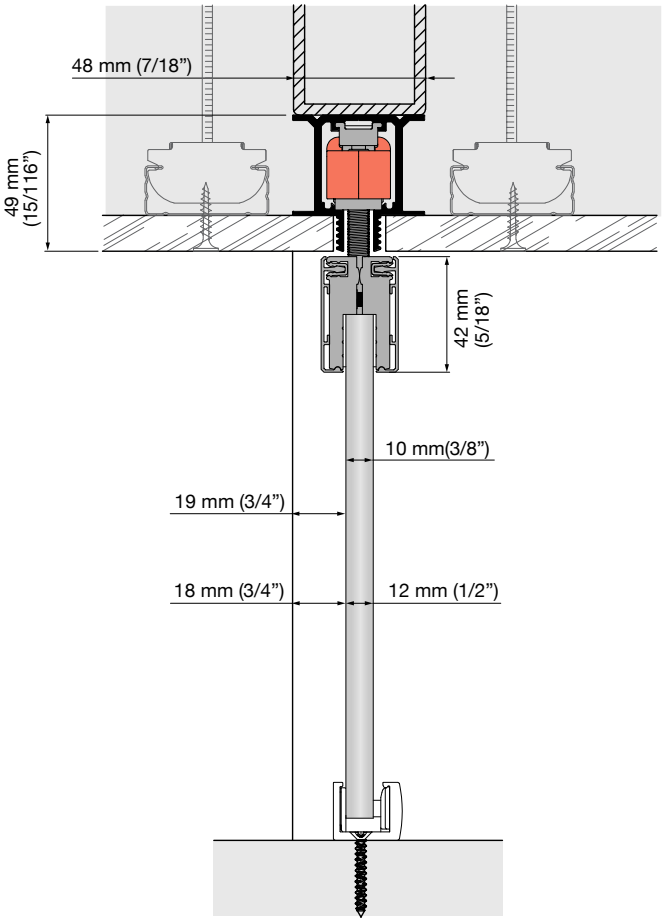

VINS

REFERENCIAS / REFERENCES / RÉFÉRENCES / REFERENZ

ESP

LITE GLASS+ 100 SILVER

Ref.	Descripción	U.	Img.
2202	PF. LITE GLASS+ 100 SILVER 2m	2	A
2203	PF. LITE GLASS+ 100 SILVER 3m	2	A
2204	PF. LITE GLASS+ 100 SILVER 4m	2	A
2206	PF. LITE GLASS+ 100 SILVER 6m	2	A
2212	PF. LITE GLASS+ 100 TOP SILVER 2m	1	B
2213	PF. LITE GLASS+ 100 TOP SILVER 3m	1	B
2214	PF. LITE GLASS+ 100 TOP SILVER 4m	1	B
2216	PF. LITE GLASS+ 100 TOP SILVER 6m	1	B
2250	JGO. ACC. LITE GLASS+ 100 KSC V10 + GAL. 1,5m + TAPAS SILVER	1	C
2260	JGO. ACC. LITE GLASS+ 100 KSC V12 + GAL. 1,5m + TAPAS SILVER	1	C
2136	PF. SOPORTE PARED 6mm LITE GLASS 100 SILVER 2m	2	D
2137	PF. SOPORTE PARED 6mm LITE GLASS 100 SILVER 3m	2	D
2138	PF. SOPORTE PARED 6mm LITE GLASS 100 SILVER 4m	2	D
2139	PF. SOPORTE PARED 6mm LITE GLASS 100m SILVER 6m	2	D
2146	PF. SOPORTE PARED 17mm LITE GLASS 100 SILVER 2m	2	E
2147	PF. SOPORTE PARED 17mm LITE GLASS 100 SILVER 3m	2	E
2148	PF. SOPORTE PARED 17mm LITE GLASS 100 SILVER 4m	2	E
2149	PF. SOPORTE PARED 17mm LITE GLASS 100 SILVER 6m	2	E
2180	JGO. TAPAS LATERALES PF. LITE GLASS+ 100 SILVER	1	F
2181	JGO. TAPAS LATERALES PF. LITE GLASS+ 100 SOPORTE PARED 6mm SILVER	1	G
2182	JGO. TAPAS LATERALES PF. LITE GLASS+ 100 SOPORTE PARED 17mm SILVER	1	H

LITE GLASS+ 100 BRONCE

Ref.	Descripción	U.	Img.
2222	PF. LITE GLASS+ 100 BRONCE 2m	1	I
2223	PF. LITE GLASS+ 100 BRONCE 3m	1	I
2224	PF. LITE GLASS+ 100 BRONCE 4m	1	I
2226	PF. LITE GLASS+ 100 BRONCE 6m	1	I
2232	PF. LITE GLASS+ 100 TOP BRONCE 2m	1	J
2233	PF. LITE GLASS+ 100 TOP BRONCE 3m	1	J
2234	PF. LITE GLASS+ 100 TOP BRONCE 4m	1	J
2236	PF. LITE GLASS+ 100 TOP BRONCE 6m	1	J
2186	JGO. TAPAS LAT. CLIP PF. LITE GLASS+ 100 BRONCE	1	K
2187	JGO. TAPAS LAT. CLIP PF. SOPORTE PARED 6mm LITE GLASS+ 100 BRONCE	1	L
2188	JGO. TAPAS LAT. CLIP PF. SOPORTE PARED 17mm LITE GLASS+ 100 BRONCE	1	M
2261	PF. SOPORTE PARED 6mm LITE GLASS+ 100 BRONCE 2m	1	N
2262	PF. SOPORTE PARED 6mm LITE GLASS+ 100 BRONCE 3m	1	N
2263	PF. SOPORTE PARED 6mm LITE GLASS+ 100 BRONCE 4m	1	N
2264	PF. SOPORTE PARED 6mm LITE GLASS+ 100 BRONCE 6m	1	N
2271	PF. SOPORTE PARED 17mm LITE GLASS+ 100 BRONCE 2m	1	O
2272	PF. SOPORTE PARED 17mm LITE GLASS+ 100 BRONCE 3m	1	O
2273	PF. SOPORTE PARED 17mm LITE GLASS+ 100 BRONCE 4m	1	O
2274	PF. SOPORTE PARED 17mm LITE GLASS+ 100 BRONCE 6m	1	O
2230	JGO. ACC. LITE GLASS+ 100 KSC V10 + GAL. 1,5m + TAPAS BRONCE	1	P
2240	JGO. ACC. LITE GLASS+ 100 KSC V12 + GAL. 1,5m + TAPAS BRONCE	1	P

LITE GLASS+ 100 NEGRO

Ref.	Descripción	U.	Img.
2242	PF. LITE GLASS+ 100 NEGRO 2m	1	Q
2243	PF. LITE GLASS+ 100 NEGRO 3m	1	Q
2244	PF. LITE GLASS+ 100 NEGRO 4m	1	Q
2246	PF. LITE GLASS+ 100 NEGRO 6m	1	Q
2252	PF. LITE GLASS+ 100 TOP NEGRO 2m	1	R
2253	PF. LITE GLASS+ 100 TOP NEGRO 3m	1	R
2254	PF. LITE GLASS+ 100 TOP NEGRO 4m	1	R
2256	PF. LITE GLASS+ 100 TOP NEGRO 6m	1	R
2196	JGO. TAPAS LAT. CLIP PF. LITE GLASS+ 100 NEGRO	1	S
2197	JGO. TAPAS LAT. CLIP PF. SOPORTE PARED 6mm LITE GLASS+ 100 NEGRO	1	T
2198	JGO. TAPAS LAT. CLIP PF. SOPORTE PARED 17mm LITE GLASS+ 100 NEGRO	1	U
2265	PF. SOPORTE PARED 6mm LITE GLASS+ 100 NEGRO 2m	1	V
2266	PF. SOPORTE PARED 6mm LITE GLASS+ 100 NEGRO 3m	1	V
2267	PF. SOPORTE PARED 6mm LITE GLASS+ 100 NEGRO 4m	1	V
2268	PF. SOPORTE PARED 6mm LITE GLASS+ 100 NEGRO 6m	1	V
2275	PF. SOPORTE PARED 17mm LITE GLASS+ 100 NEGRO 2m	1	W
2276	PF. SOPORTE PARED 17mm LITE GLASS+ 100 NEGRO 3m	1	W
2277	PF. SOPORTE PARED 17mm LITE GLASS+ 100 NEGRO 4m	1	W
2278	PF. SOPORTE PARED 17mm LITE GLASS+ 100 NEGRO 6m	1	W
2270	JGO. ACC. LITE GLASS+ 100 KSC V10 + GAL. 1,5m + TAPAS NEGRO	1	X
2280	JGO. ACC. LITE GLASS+ 100 KSC V12 + GAL. 1,5m + TAPAS NEGRO	1	X

ESP

TIENDA ONLINE

KIT LITE GLASS+ "T" KSC SILVER

Ref.	Descripción	U.	Img.
1811	KIT LITE GLASS+ "T" KSC SILVER V10 (1,80m)	1	Y
1813	KIT LITE GLASS+ "T" KSC SILVER V12 (1,80m)	1	Y
1838	KIT LITE GLASS+ "T" KSC SILVER V10 (2,40m)	1	Y
1839	KIT LITE GLASS+ "T" KSC SILVER V12 (2,40m)	1	Y
1840	KIT LITE GLASS+ "T" KSC SILVER V10 (2,80m)	1	Y
1842	KIT LITE GLASS+ "T" KSC SILVER V10 DUO (4,00m)	1	Y
1845	KIT LITE GLASS+ "T" KSC SILVER V12 DUO (4,00m)	1	Y

KIT LITE GLASS+ "T" KSC NEGRO

Ref.	Descripción	U.	Img.
1847	KIT LITE GLASS+ "T" KSC NEGRO V10 (1,80m)	1	Z
1848	KIT LITE GLASS+ "T" KSC NEGRO V12 (1,80m)	1	Z
1849	KIT LITE GLASS+ "T" KSC NEGRO V10 (2,40m)	1	Z
1850	KIT LITE GLASS+ "T" KSC NEGRO V12 (2,40m)	1	Z
1853	KIT LITE GLASS+ "T" KSC NEGRO V10 (2,80m)	1	Z
1855	KIT LITE GLASS+ "T" KSC NEGRO V10 DUO (4,00m)	1	Z
1856	KIT LITE GLASS+ "T" KSC NEGRO V12 DUO (4,00m)	1	Z

DISTRIBUCIÓN

KIT LITE GLASS+ "T" KSC SILVER

Ref.	Descripción	U.	Img.
1775	PF. LITE GLASS ''T'' 4m	6	Y
1773	PF. LITE GLASS ''T'' 6m	4	Y
1776	JGO. ACC. LITE GLASS+ ''T'' KSC SILVER V10	2	Y
1777	JGO. ACC. LITE GLASS+ ''T'' KSC SILVER V12	2	Y

REFERENCIAS / REFERENCES / RÉFÉRENCES / REFERENZ

ENG

LITE GLASS+ 100 SILVER

Ref.	Description	Units	Img.
2202	PF. LITE GLASS+ 100 SILVER 2m	2	A
2203	PF. LITE GLASS+ 100 SILVER 3m	2	A
2204	PF. LITE GLASS+ 100 SILVER 4m	2	A
2206	PF. LITE GLASS+ 100 SILVER 6m	2	A
2212	PF. LITE GLASS+ 100 TOP SILVER 2m	1	B
2213	PF. LITE GLASS+ 100 TOP SILVER 3m	1	B
2214	PF. LITE GLASS+ 100 TOP SILVER 4m	1	B
2216	PF. LITE GLASS+ 100 TOP SILVER 6m	1	B
2250	SET OF ACC. LITE GLASS+ 100 KSC V10 + COVER 1,5m + END CAPS SILVER	1	C
2260	SET OF ACC. LITE GLASS+ 100 KSC V12 + COVER 1,5m + END CAPS SILVER	1	C
2136	PF. WALL BRACKET 6mm LITE GLASS 100 SILVER 2m	2	D
2137	PF. WALL BRACKET 6mm LITE GLASS 100 SILVER 3m	2	D
2138	PF. WALL BRACKET6mm LITE GLASS 100 SILVER 4m	2	D
2139	PF. WALL BRACKET 6mm LITE GLASS 100m SILVER 6m	2	D
2146	PF. WALL BRACKET 17mm LITE GLASS 100 SILVER 2m	2	E
2147	PF. WALL BRACKET 17mm LITE GLASS 100 SILVER 3m	2	E
2148	PF. WALL BRACKET 17mm LITE GLASS 100 SILVER 4m	2	E
2149	PF. WALL BRACKET 17mm LITE GLASS 100 SILVER 6m	2	E
2180	SET OF LATERAL COVER PF. LITE GLASS+ 100 SILVER	1	F
2181	SET OF LATERAL COVER PF. LITE GLASS+ 100 WALL BRACKET 6mm SILVER	1	G
2182	SET OF LATERAL COVER PF. LITE GLASS+ 100 WALL BRACKET 17mm SILVER	1	H

LITE GLASS+ 100 BRONZE

Ref.	Description	Units	Img.
2222	PF. LITE GLASS+ 100 BRONZE 2m	1	I
2223	PF. LITE GLASS+ 100 BRONZE 3m	1	I
2224	PF. LITE GLASS+ 100 BRONZE 4m	1	I
2226	PF. LITE GLASS+ 100 BRONZE 6m	1	I
2232	PF. LITE GLASS+ 100 TOP BRONZE 2m	1	J
2233	PF. LITE GLASS+ 100 TOP BRONZE 3m	1	J
2234	PF. LITE GLASS+ 100 TOP BRONZE 4m	1	J
2236	PF. LITE GLASS+ 100 TOP BRONZE 6m	1	J
2186	SET OF END CAPS CLIP PF. LITE GLASS+ 100 BRONZE	1	K
2187	SET OF END CAPS CLIP PF. WALL BRACKET 6mm LITE GLASS+ 100 BRONZE	1	L
2188	SET OF END CAPS CLIP PF. WALL BRACKET 17mm LITE GLASS+ 100 BRONZE	1	M
2261	PF. WALL BRACKET 6mm LITE GLASS+ 100 BRONZE 2m	1	N
2262	PF. WALL BRACKET 6mm LITE GLASS+ 100 BRONZE 3m	1	N
2263	PF. WALL BRACKET 6mm LITE GLASS+ 100 BRONZE 4m	1	N
2264	PF. WALL BRACKET 6mm LITE GLASS+ 100 BRONZE 6m	1	N
2271	PF. WALL BRACKET 17mm LITE GLASS+ 100 BRONZE 2m	1	O
2272	PF. WALL BRACKET 17mm LITE GLASS+ 100 BRONZE 3m	1	O
2273	PF. WALL BRACKET 17mm LITE GLASS+ 100 BRONZE 4m	1	O
2274	PF. WALL BRACKET 17mm LITE GLASS+ 100 BRONZE 6m	1	O
2230	SET OF ACC. LITE GLASS+ 100 KSC V10 + COVER 1,5m + END CAPS BRONZE	1	P
2240	SET OF ACC. LITE GLASS+ 100 KSC V12 + COVER 1,5m + END CAPS BRONZE	1	P

LITE GLASS+ 100 BLACK

Ref.	Description	Units	Img.
2242	PF. LITE GLASS+ 100 BLACK 2m	1	Q
2243	PF. LITE GLASS+ 100 BLACK 3m	1	Q
2244	PF. LITE GLASS+ 100 BLACK 4m	1	Q
2246	PF. LITE GLASS+ 100 BLACK 6m	1	Q
2252	PF. LITE GLASS+ 100 TOP BLACK 2m	1	R
2253	PF. LITE GLASS+ 100 TOP BLACK 3m	1	R
2254	PF. LITE GLASS+ 100 TOP BLACK 4m	1	R
2256	PF. LITE GLASS+ 100 TOP BLACK 6m	1	R
2196	SET OF END CAPS CLIP PF. LITE GLASS+ 100 BLACK	1	S
2197	SET OF END CAPS CLIP PF. WALL BRACKET 6mm LITE GLASS+ 100 BLACK	1	T
2198	SET OF END CAPS CLIP PF. WALL BRACKET 17mm LITE GLASS+ 100 BLACK	1	U
2265	PF. WALL BRACKET 6mm LITE GLASS+ 100 BLACK 2m	1	V
2266	PF. WALL BRACKET 6mm LITE GLASS+ 100 BLACK 3m	1	V
2267	PF. WALL BRACKET 6mm LITE GLASS+ 100 BLACK 4m	1	V
2268	PF. WALL BRACKET 6mm LITE GLASS+ 100 BLACK 6m	1	V
2275	PF. WALL BRACKET 17mm LITE GLASS+ 100 BLACK 2m	1	W
2276	PF. WALL BRACKET 17mm LITE GLASS+ 100 BLACK 3m	1	W
2277	PF. WALL BRACKET 17mm LITE GLASS+ 100 BLACK 4m	1	W
2278	PF. WALL BRACKET 17mm LITE GLASS+ 100 BLACK 6m	1	W
2270	SET OF ACC. LITE GLASS+ 100 KSC V10 + COVER 1,5m + END CAPS BLACK	1	X
2280	SET OF ACC. LITE GLASS+ 100 KSC V12 + COVER 1,5m + END CAPS BLACK	1	X

ENG

KIT LITE GLASS+ "T" KSC SILVER

Ref.	Description	Units	Img.
1811	KIT LITE GLASS+ "T" KSC SILVER V10 (1,80m)	1	Y
1813	KIT LITE GLASS+ "T" KSC SILVER V12 (1,80m)	1	Y
1838	KIT LITE GLASS+ "T" KSC SILVER V10 (2,40m)	1	Y
1839	KIT LITE GLASS+ "T" KSC SILVER V12 (2,40m)	1	Y
1840	KIT LITE GLASS+ "T" KSC SILVER V10 (2,80m)	1	Y
1842	KIT LITE GLASS+ "T" KSC SILVER V10 DUO (4,00m)	1	Y
1845	KIT LITE GLASS+ "T" KSC SILVER V12 DUO (4,00m)	1	Y

KIT LITE GLASS+ "T" KSC BLACK

Ref.	Description	Units	Img.
1847	KIT LITE GLASS+ "T" KSC BLACK V10 (1,80m)	1	Z
1848	KIT LITE GLASS+ "T" KSC BLACK V12 (1,80m)	1	Z
1849	KIT LITE GLASS+ "T" KSC BLACK V10 (2,40m)	1	Z
1850	KIT LITE GLASS+ "T" KSC BLACK V12 (2,40m)	1	Z
1853	KIT LITE GLASS+ "T" KSC BLACK V10 (2,80m)	1	Z
1855	KIT LITE GLASS+ "T" KSC BLACK V10 DUO (4,00m)	1	Z
1856	KIT LITE GLASS+ "T" KSC BLACK V12 DUO (4,00m)	1	Z

REFERENCIAS / REFERENCES / RÉFÉRENCES / REFERENZ

FRA

LITE GLASS+ 100 SILVER

Ref.	Description	Unités	Img.
2202	RAIL LITE GLASS+ 100 SILVER 2m	2	A
2203	RAIL LITE GLASS+ 100 SILVER 3m	2	A
2204	RAIL LITE GLASS+ 100 SILVER 4m	2	A
2206	RAIL LITE GLASS+ 100 SILVER 6m	2	A
2212	RAIL LITE GLASS+ 100 TOP SILVER 2m	1	B
2213	RAIL LITE GLASS+ 100 TOP SILVER 3m	1	B
2214	RAIL LITE GLASS+ 100 TOP SILVER 4m	1	B
2216	RAIL LITE GLASS+ 100 TOP SILVER 6m	1	B
2250	JEU ACC. LITE GLASS+ 100 KSC V10 + BANDEAU 1,5m + CACHES SILVER	1	C
2260	JEU ACC. LITE GLASS+ 100 KSC V12 + BANDEAU 1,5m + CACHES SILVER	1	C
2136	RAIL SUPPORT MURAL 6mm LITE GLASS 100 SILVER 2m	2	D
2137	RAIL SUPPORT MURAL 6mm LITE GLASS 100 SILVER 3m	2	D
2138	RAIL SUPPORT MURAL 6mm LITE GLASS 100 SILVER 4m	2	D
2139	RAIL SUPPORT MURAL 6mm LITE GLASS 100m SILVER 6m	2	D
2146	RAIL SUPPORT MURAL 17mm LITE GLASS 100 SILVER 2m	2	E
2147	RAIL SUPPORT MURAL 17mm LITE GLASS 100 SILVER 3m	2	E
2148	RAIL SUPPORT MURAL 17mm LITE GLASS 100 SILVER 4m	2	E
2149	RAIL SUPPORT MURAL 17mm LITE GLASS 100 SILVER 6m	2	E
2180	JEU ACC. CACHES LAT. RAIL LITE GLASS+ 100 SILVER	1	F
2181	JEU ACC. CACHES LAT. RAIL LITE GLASS+ 100 SUPPORT MURAL 6mm SILVER	1	G
2182	JEU ACC. CACHES LAT. RAIL LITE GLASS+ 100 SUPPORT MURAL 17mm SILVER	1	H

LITE GLASS+ 100 BRONZE

Ref.	Description	Unités	Img.
2222	RAIL LITE GLASS+ 100 BRONZE 2m	1	I
2223	RAIL LITE GLASS+ 100 BRONZE 3m	1	I
2224	RAIL LITE GLASS+ 100 BRONZE 4m	1	I
2226	RAIL LITE GLASS+ 100 BRONZE 6m	1	I
2232	RAIL LITE GLASS+ 100 TOP BRONZE 2m	1	J
2233	RAIL LITE GLASS+ 100 TOP BRONZE 3m	1	J
2234	RAIL LITE GLASS+ 100 TOP BRONZE 4m	1	J
2236	RAIL LITE GLASS+ 100 TOP BRONZE 6m	1	J
2186	JEU ACC. CACHES CLIP RAIL LITE GLASS+ 100 BRONZE	1	K
2187	JEU ACC. CACHES CLIP RAIL SUPPORT MURAL 6mm LITE GLASS+ 100 BRONZE	1	L
2188	JEU ACC. CACHES CLIP RAIL SUPPORT MURAL 17mm LITE GLASS+ 100 BRONZE	1	M
2261	RAIL SUPPORT MURAL 6mm LITE GLASS+ 100 BRONZE 2m	1	N
2262	RAIL SUPPORT MURAL 6mm LITE GLASS+ 100 BRONZE 3m	1	N
2263	RAIL SUPPORT MURAL 6mm LITE GLASS+ 100 BRONZE 4m	1	N
2264	RAIL SUPPORT MURAL 6mm LITE GLASS+ 100 BRONZE 6m	1	N
2271	RAIL SUPPORT MURAL 17mm LITE GLASS+ 100 BRONZE 2m	1	O
2272	RAIL SUPPORT MURAL 17mm LITE GLASS+ 100 BRONZE 3m	1	O
2273	RAIL SUPPORT MURAL 17mm LITE GLASS+ 100 BRONZE 4m	1	O
2274	RAIL SUPPORT MURAL 17mm LITE GLASS+ 100 BRONZE 6m	1	O
2230	JEU ACC. LITE GLASS+ 100 KSC V10 + BANDEAU 1,5m + CACHES BRONZE	1	P
2240	JEU ACC. LITE GLASS+ 100 KSC V12 + BANDEAU 1,5m + CACHES BRONZE	1	P

LITE GLASS+ 100 NOIR

Ref.	Description	Unités	Img.
2242	RAIL LITE GLASS+ 100 NOIR 2m	1	Q
2243	RAIL LITE GLASS+ 100 NOIR 3m	1	Q
2244	RAIL LITE GLASS+ 100 NOIR 4m	1	Q
2246	RAIL LITE GLASS+ 100 NOIR 6m	1	Q
2252	RAIL LITE GLASS+ 100 TOP NOIR 2m	1	R
2253	RAIL LITE GLASS+ 100 TOP NOIR 3m	1	R
2254	RAIL LITE GLASS+ 100 TOP NOIR 4m	1	R
2256	RAIL LITE GLASS+ 100 TOP NOIR 6m	1	R
2196	JEU ACC. CACHES CLIP RAIL LITE GLASS+ 100 NOIR	1	S
2197	JEU ACC. CACHES CLIP RAIL SUPPORT MURAL 6mm LITE GLASS+ 100 NOIR	1	T
2198	JEU ACC. CACHES CLIP RAIL SUPPORT MURAL 17mm LITE GLASS+ 100 NOIR	1	U
2265	RAIL SUPPORT MURAL 6mm LITE GLASS+ 100 NOIR 2m	1	V
2266	RAIL SUPPORT MURAL 6mm LITE GLASS+ 100 NOIR 3m	1	V
2267	RAIL SUPPORT MURAL 6mm LITE GLASS+ 100 NOIR 4m	1	V
2268	RAIL SUPPORT MURAL 6mm LITE GLASS+ 100 NOIR 6m	1	V
2275	RAIL SUPPORT MURAL 17mm LITE GLASS+ 100 NOIR 2m	1	W
2276	RAIL SUPPORT MURAL 17mm LITE GLASS+ 100 NOIR 3m	1	W
2277	RAIL SUPPORT MURAL 17mm LITE GLASS+ 100 NOIR 4m	1	W
2278	RAIL SUPPORT MURAL 17mm LITE GLASS+ 100 NOIR 6m	1	W
2270	JEU ACC. LITE GLASS+ 100 KSC V10 + BANDEAU 1,5m + CACHES NOIR	1	X

FRA

KIT LITE GLASS+ "T" KSC SILVER			
Ref.	Description	Unités	Img.
1811	KIT LITE GLASS+ "T" KSC SILVER V10 (1,80m)	1	Y
1813	KIT LITE GLASS+ "T" KSC SILVER V12 (1,80m)	1	Y
1838	KIT LITE GLASS+ "T" KSC SILVER V10 (2,40m)	1	Y
1839	KIT LITE GLASS+ "T" KSC SILVER V12 (2,40m)	1	Y
1840	KIT LITE GLASS+ "T" KSC SILVER V10 (2,80m)	1	Y
1842	KIT LITE GLASS+ "T" KSC SILVER V10 DUO (4,00m)	1	Y
1845	KIT LITE GLASS+ "T" KSC SILVER V12 DUO (4,00m)	1	Y

KIT LITE GLASS+ "T" KSC NOIR			
Ref.	Description	Unités	Img.
1847	KIT LITE GLASS+ "T" KSC NOIR V10 (1,80m)	1	Z
1848	KIT LITE GLASS+ "T" KSC NOIR V12 (1,80m)	1	Z
1849	KIT LITE GLASS+ "T" KSC NOIR V10 (2,40m)	1	Z
1850	KIT LITE GLASS+ "T" KSC NOIR V12 (2,40m)	1	Z
1853	KIT LITE GLASS+ "T" KSC NOIR V10 (2,80m)	1	Z
1855	KIT LITE GLASS+ "T" KSC NOIR V10 DUO (4,00m)	1	Z
1856	KIT LITE GLASS+ "T" KSC NOIR V12 DUO (4,00m)	1	Z

REFERENCIAS / REFERENCES / RÉFÉRENCES / REFERENZ

DEU

LITE GLASS+ 100 SILVER

Ref.	Beschreibung	Einh.	Img.
2202	PF. LITE GLASS+ 100 SILVER 2 m	2	A
2203	PF. LITE GLASS+ 100 SILVER 3 m	2	A
2204	PF. LITE GLASS+ 100 SILVER 4m	2	A
2206	PF. LITE GLASS+ 100 SILVER 6m	2	A
2212	PF. LITE GLASS+ 100 TOP SILVER 2 m	1	B
2213	PF. LITE GLASS+ 100 TOP SILVER 3 m	1	B
2214	PF. LITE GLASS+ 100 TOP SILVER 4 m	1	B
2216	PF. LITE GLASS+ 100 TOP SILVER 6 m	1	B
2250	SET ACC. LITE GLASS+ 100 KSC V10 + ABD. 1,5 m. ABDECKUNGEN SILVER	1	C
2260	SET ACC. LITE GLASS+ 100 KSC V12 + ABD. 1,5 m. ABDECKUNGEN SILVER	1	C
2136	PF. WANDHALTERUNG 6 mm LITE GLASS+ 100 SILVER 2 m	2	D
2137	PF. WANDHALTERUNG 6 mm LITE GLASS+ 100 SILVER 3 m	2	D
2138	PF. WANDHALTERUNG 6 mm LITE GLASS+ 100 SILVER 4 m	2	D
2139	PF. WANDHALTERUNG 6 mm LITE GLASS+ 100 m SILVER 6 m	2	D
2146	PF. WANDHALTERUNG 17mm LITE GLASS+ 100 SILVER 2 m	2	E
2147	PF. WANDHALTERUNG 17mm LITE GLASS+ 100 SILVER 3 m	2	E
2148	PF. WANDHALTERUNG 17mm LITE GLASS+ 100 SILVER 4 m	2	E
2149	PF. WANDHALTERUNG 17mm LITE GLASS+ 100 SILVER 6 m	2	E
2180	SET SEITLICHE ABDECKUNGEN PF. LITE GLASS+ 100 SILVER	1	F
2181	SET SEITLICHE ABDECKUNGEN PF. LITE GLASS+ 100 WANDHALTERUNG 6 mm SILVER	1	G
2182	SET SEITLICHE ABDECKUNGEN PF. LITE GLASS+ 100 WANDHALTERUNG 17 mm SILVER	1	H

LITE GLASS+ 100 BRONZE

Ref.	Beschreibung	Einh.	Img.
2222	PF. LITE GLASS+ 100 BRONZE 2 m	1	I
2223	PF. LITE GLASS+ 100 BRONZE 3 m	1	I
2224	PF. LITE GLASS+ 100 BRONZE 4 m	1	I
2226	PF. LITE GLASS+ 100 BRONZE 6 m	1	I
2232	PF. LITE GLASS+ 100 TOP BRONZE 2 m	1	J
2233	PF. LITE GLASS+ 100 TOP BRONZE 3 m	1	J
2234	PF. LITE GLASS+ 100 TOP BRONZE 4 m	1	J
2236	PF. LITE GLASS+ 100 TOP BRONZE 6 m	1	J
2186	SET SEITL. ABD. CLIP PF. LITE GLASS+ 100 BRONZE	1	K
2187	SET SEITL. ABD. CLIP PF. WANDHALTERUNG 6 mm LITE GLASS+ 100 BRONZE	1	L
2188	SET SEITL. ABD. CLIP PF. WANDHALTERUNG 17 mm LITE GLASS+ 100 BRONZE	1	M
2261	PF. WANDHALTERUNG 6 mm LITE GLASS+ 100 BRONZE 2 m	1	N
2262	PF. WANDHALTERUNG 6 mm LITE GLASS+ 100 BRONZE 3 m	1	N
2263	PF. WANDHALTERUNG 6 mm LITE GLASS+ 100 BRONZE 4 m	1	N
2264	PF. WANDHALTERUNG 6 mm LITE GLASS+ 100 BRONZE 6 m	1	N
2271	PF. WANDHALTERUNG 17mm LITE GLASS+ 100 BRONZE 2 m	1	O
2272	PF. WANDHALTERUNG 17mm LITE GLASS+ 100 BRONZE 3 m	1	O
2273	PF. WANDHALTERUNG 17mm LITE GLASS+ 100 BRONZE 4 m	1	O
2274	PF. WANDHALTERUNG 17mm LITE GLASS+ 100 BRONZE 6m	1	O
2230	SET ACC. LITE GLASS+ 100 KSC V10 + ABD. 1,5 m. ABDEC-KUNGEN BRONZE	1	P
2240	SET ACC. LITE GLASS+ 100 KSC V12 + ABD. 1,5 m. ABDEC-KUNGEN BRONZE	1	P

LITE GLASS+ 100 SCHWARZ

Ref.	Beschreibung	Einh.	Img.
2242	PF. LITE GLASS+ 100 SCHWARZ 2 m	1	Q
2243	PF. LITE GLASS+ 100 SCHWARZ 3 m	1	Q
2244	PF. LITE GLASS+ 100 SCHWARZ 4 m	1	Q
2246	PF. LITE GLASS+ 100 SCHWARZ 6 m	1	Q
2252	PF. LITE GLASS+ 100 TOP SCHWARZ 2 m	1	R
2253	PF. LITE GLASS+ 100 TOP SCHWARZ 3 m	1	R
2254	PF. LITE GLASS+ 100 TOP SCHWARZ 4 m	1	R
2256	PF. LITE GLASS+ 100 TOP SCHWARZ 6 m	1	R
2196	SET SEITL. ABD. CLIP PF. LITE GLASS+ 100 SCHWARZ	1	S
2197	SET SEITL. ABD. CLIP PF. WANDHALTERUNG 6 mm LITE GLASS+ 100 SCHWARZ	1	T
2198	SET SEITL. ABD. CLIP PF. WANDHALTERUNG 17 mm LITE GLASS+ 100 SCHWARZ	1	U
2265	PF. WANDHALTERUNG 6 mm LITE GLASS+ 100 SCHWARZ 2 m	1	V
2266	PF. WANDHALTERUNG 6 mm LITE GLASS+ 100 SCHWARZ 3 m	1	V
2267	PF. WANDHALTERUNG 6 mm LITE GLASS+ 100 SCHWARZ 4 m	1	V
2268	PF. WANDHALTERUNG 6 mm LITE GLASS+ 100 SCHWARZ 6 m	1	V
2275	PF. WANDHALTERUNG 17mm LITE GLASS+ 100 SCHWARZ 2 m	1	W
2276	PF. WANDHALTERUNG 17mm LITE GLASS+ 100 SCHWARZ 3 m	1	W
2277	PF. WANDHALTERUNG 17mm LITE GLASS+ 100 SCHWARZ 4 m	1	W
2278	PF. WANDHALTERUNG 17mm LITE GLASS+ 100 SCHWARZ 6 m	1	W
2270	SET ACC. LITE GLASS+ 100 KSC V10 + ABD. 1,5 m. SCHWARZE ABDECKUNGEN	1	X

DEU

KIT LITE GLASS+ "T" KSC SILBER			
Ref.	Beschreibung	Einh.	Img.
1811	KIT LITE GLASS+ "T" KSC SILBER V10 (1,80m)	1	Y
1813	KIT LITE GLASS+ "T" KSC SILBER V12 (1,80m)	1	Y
1838	KIT LITE GLASS+ "T" KSC SILBER V10 (2,40m)	1	Y
1839	KIT LITE GLASS+ "T" KSC SILBER V12 (2,40m)	1	Y
1840	KIT LITE GLASS+ "T" KSC SILBER V10 (2,80m)	1	Y
1842	KIT LITE GLASS+ "T" KSC SILBER V10 DUO (4,00m)	1	Y
1845	KIT LITE GLASS+ "T" KSC SILBER V12 DUO (4,00m)	1	Y

KIT LITE GLASS+ "T" KSC SCHWARZ			
Ref.	Beschreibung	Einh.	Img.
1847	KIT LITE GLASS+ "T" KSC SCHWARZ V10 (1,80m)	1	Z
1848	KIT LITE GLASS+ "T" KSC SCHWARZ V12 (1,80m)	1	Z
1849	KIT LITE GLASS+ "T" KSC SCHWARZ V10 (2,40m)	1	Z
1850	KIT LITE GLASS+ "T" KSC SCHWARZ V12 (2,40m)	1	Z
1853	KIT LITE GLASS+ "T" KSC SCHWARZ V10 (2,80m)	1	Z
1855	KIT LITE GLASS+ "T" KSC SCHWARZ V10 DUO (4,00m)	1	Z
1856	KIT LITE GLASS+ "T" KSC SCHWARZ V12 DUO (4,00m)	1	Z

REFERENCIAS / REFERENCES / RÉFÉRENCES / REFERENZ

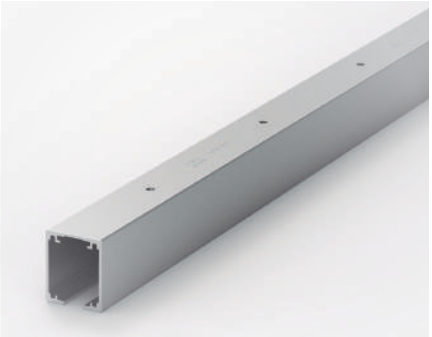
A

B

C

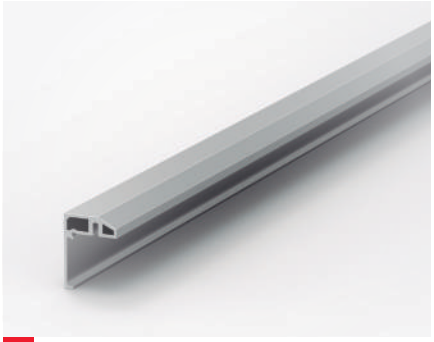
D

E

F

G

H

I

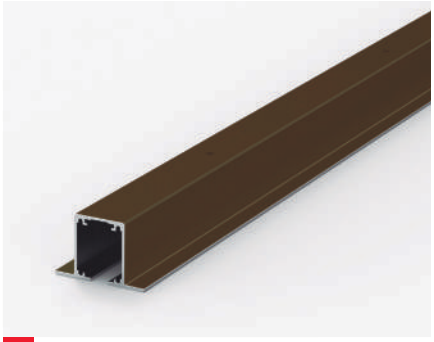
J

K

L

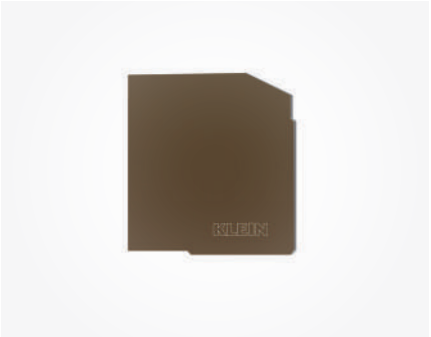

M

N

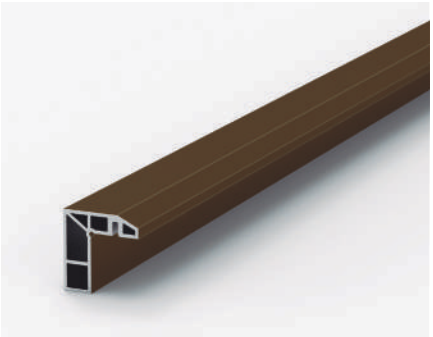
O

P

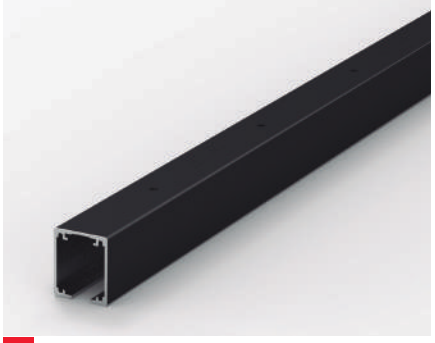

Q

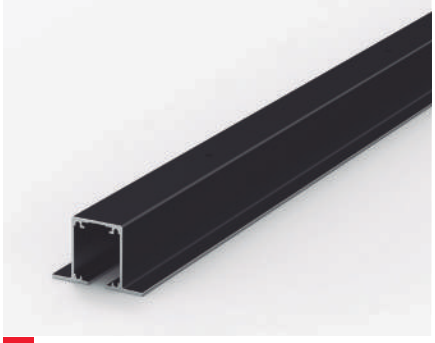

R

S

T

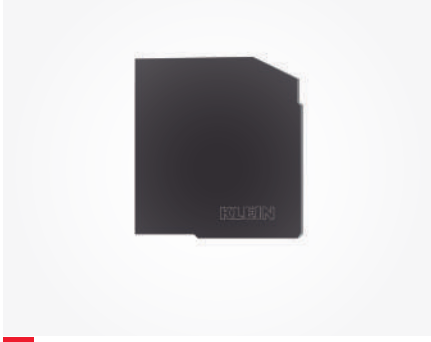

U

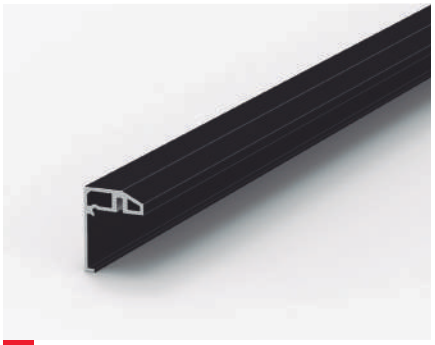

V

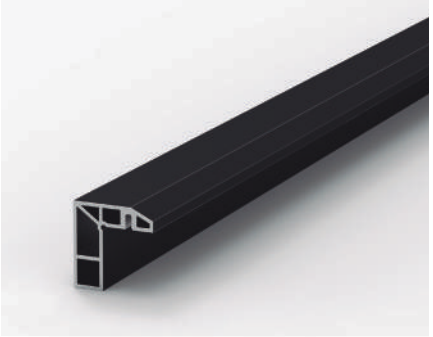

W

X

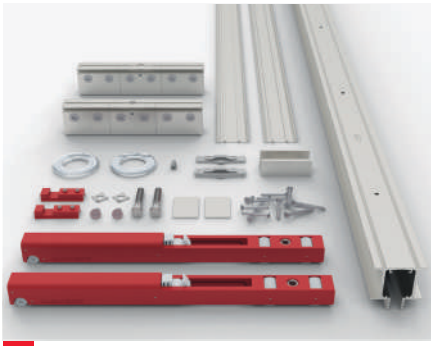

Y

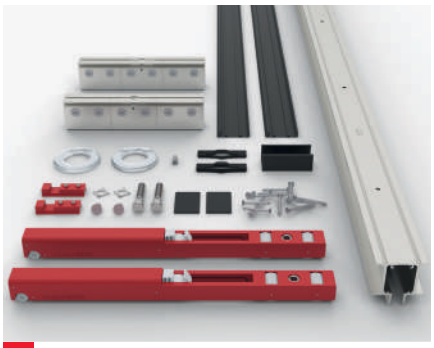

Z

416-2122-0821-V22

KLEIN®

KLEIN EUROPE
Edificio KLEIN
Polígono Industrial Can Cuyás
N-150 Km. 1
08110 Montcada i Reixac
Barcelona (Spain)

Tel.: +34 935 760 101
Fax: +34 935 760 109

+Info
klein@klein.es
www.klein.es

Síguenos en redes
Follow us on social media

WARRANTY 5 YEARS

Las fotografías, imágenes, contenidos y productos descritos en el presente catalogo tienen carácter exclusivamente ilustrativo y orientativo por lo que no originarán derechos ni expectativas de derechos, ni constituyen una oferta comercial vinculante, resultando protegidos por derechos de propiedad intelectual e industrial a favor de KLEIN IBERICA, S.A.® / The photos, pictures, contents and products described in this catalogue are for information and guidance purposes only and therefore shall not give rise to any rights or expectations nor constitute a binding sales offer as they are protected by intellectual and industrial property rights in favour of KLEIN IBERICA, S.A.®