SULZER

COX™ Dispensing Solutions

1-Component Dispensers

1-Component Dispensers
COX™ System Overview

COX™ Manual

The COX **Manual Dispenser** product range

Pages 10 to 49

COX™ Dispensers

COX™ Battery

The COX **Battery Dispenser** product range

Pages 50 to 63

COX™ Pneumatic

The COX **Pneumatic Dispenser** product range

Pages 64 to 97

The tradition, quality, reliability and performance of the COX™ Dispensers originally manufactured and supplied by PC COX since 1958 continues into the future as part of the Sulzer Mixpac product portfolio.

Offering a range of excellent standard products, as well as a constant product development and surveillance of the market, Sulzer Mixpac is able to meet any of your various requirements. In close cooperation with manufacturers of sealants/ adhesives and professional end users, we meet even very specific and stringent requirements. Adaptation and flexibility are key words for our product development. As a manufacturer, Sulzer Mixpac offers high reliability on deliveries and customized labeling of our products. With these performances we have been appointed A-supplier with Europe's leading distributors of dispensing tools.

The renowned COX dispensers will be available through Sulzer Mixpac AG and its affiliates while Sulzer Mixpac AG has entrusted Sulzer Mixpac (UK) Ltd. to continue with the manufacture of the dispensers at the PC COX site in Hungerford, UK.

Originally established in 1958 by Patrick Clement Cox, Sulzer Mixpac (UK) has become the global market leader in the design and production of manual, pneumatic and battery hand held sealant and adhesive applicators. Our success story and growth started with our first product, still manufactured due to its popularity and reliability but now known as the EasiFlow HD. Subsequent later models, with a new mechanism incorporating a smooth rod with clutch and release plate, became the worldwide industry standard. The PC COX product range, which includes cartridge, sachet, bulk, one and two-component dispensers, were originally manufactured at our factory in the UK and will be continued to guarantee professional quality. On July 1st 2016 our name changed from PC Cox Ltd to Sulzer Mixpac (UK) Ltd. To ensure retention of our strong brand and market position, Sulzer Mixpac (UK) Ltd continues to market our products under the well-known and widely-recognized COX brand: Sulzer Mixpac (UK) Ltd., 1 Tealgate, Charnham Park, Hungerford RG17 0YT, UK. Email: coxsales@sulzer.com, Phone: +44 (0)1488 647 800.

PROFESSIONAL COX™ DISPENSING EXPERTISE

1-Component Dispensers

Product Ranges

Professional dispensing for all application.

	Name/Description	Cartridge / Sachet / Bulk	Cartridge / Sachet / Bulk / Capacity	Maximum Thrust	Mechanical Advantage Ratio	Material Viscosity	Pages
Manual Dispensers							
	MPD 32	cartridge	30mL (1.0oz)	2.5kN	16:1	low/ medium	10-11
	MPD 100	cartridge	50mL (1.8oz), 80mL (2.7oz)	2.5kN	16:1	low/ medium	12-13
	EasiFlow™ HD Lite	cartridge	310mL (10.5oz)	1.2kN	7:1	low	14-15
	EasiFlow™ HD	cartridge	310mL (10.5oz) 400mL (13.5oz)	1.2kN	7:1	low	16-17
	MidiFlow™ Cartridge	cartridge	310mL (10.5oz) 400mL (13.5oz)	1.5kN	10:1	low	18-19
	MidiFlow™ Combi	cartridge/ sachet	310mL (10.5oz) 400mL (13.5oz) 600mL (20.3oz)	1.5kN	10:1	low	20-21
	PowerFlow™ Cartridge	cartridge	310mL (10.5oz) 400mL (13.5oz)	2.5kN	12:1	low/ medium	22-23
	PowerFlow™ Cartridge 1000S	cartridge	1000mL (33.8oz)	2.5kN	12:1	low/ medium	24-25
	PowerFlow™ Cartridge 1000L	cartridge	1000mL (33.8oz)	2.5kN	12:1	low/ medium	26-27
	PowerFlow™ Quart	cartridge	946mL (32.0oz)	2.5kN	12:1	low/ medium	28-29
	PowerFlow™ Combi	cartridge/ sachet	310mL (10.5oz) 400mL (13.5oz) 600mL (20.3oz)	2.5kN	12:1	low/ medium	30-31
	PowerFlow™ Bulk	bulk	2000mL (67.6oz) 4000mL (135.3oz)	2.5kN	12:1	low/ medium	32-33

	Name/Description	Cartridge / Sachet / Bulk	Cartridge / Sachet / Bulk / Capacity	Maximum Thrust	Mechanical Advantage Ratio	Material Viscosity	Pages
	PowerFlow™ HP Cartridge	cartridge	310mL (10.5oz) 400mL (13.5oz)	3.5kN	18:1	low/high	34-35
	PowerFlow™ HP Combi	cartridge/ sachet	310mL (10.5oz) 400mL (13.5oz) 600mL (20.3oz)	3.5kN	18:1	low/high	36-37
	PowerFlow™ HP Quart Cartridge	cartridge	946mL (32.0oz)	3.5kN	18:1	low/high	38-39
	UltraFlow™ Cartridge	cartridge	310mL (10.5oz)	4.5kN	25:1	medium/ high	40-41
	UltraFlow™ Combi	cartridge/ sachet	310mL (10.5oz) 400mL (13.5oz) 600mL (20.3oz)	4.5kN	25:1	medium/ high	42-43
	UltraFlow™ Bulk	bulk	600mL (20.3oz) 1000mL (33.8oz)	4.5kN	25:1	medium/ high	44-45
	Ultrapoint™ Bulk	bulk	800mL (35.2oz)	2.5kN	12:1	low/ medium	46-47
	Ultrapoint™ HP Bulk	bulk	800mL (35.2oz)	3.5kN	18:1	medium/ high	48-49

1-Component Dispensers

Product Ranges

Smart dispensing for all application.

	Name/Description	Cartridge / Sachet / Bulk	Cartridge / Sachet / Bulk / Capacity	Maximum Thrust	Mechanical Advantage Ratio	Material Viscosity	Pages
Battery Dispensers					**Voltage**		
	EasiPower™ Plus Cartridge	cartridge	310mL (10.5oz) 400mL (13.5oz)	2.5kN	10.8V	low/ medium	50-51
	EasiPower™ Plus Combi	cartridge/ sachet	310mL (10.5oz) 400mL (13.5oz) 600mL (20.3oz)	2.5kN	10.8V	low/ medium	52-53
	EasiPower™ Plus Quart	cartridge/ sachet	946mL (29oz)	2.5kN	10.8V	low/ medium	54-55
	ElectraFlow™ Plus Cartridge	cartridge	310mL (10.5oz)	3.5kN	18V	medium/ high	56-57
	ElectraFlow™ Plus Combi	cartridge/ sachet	310mL (10.5oz) 400mL (13.5oz) 600mL (20.3oz)	3.5kN	18V	medium/ high	58-59
	ElectraFlow™ Plus Quart	cartridge	946mL (32.0oz)	3.5kN	18V	medium/ high	60-61

	Name/Description	Cartridge / Sachet / Bulk	Cartridge / Sachet / Bulk / Capacity	Maximum Thrust	Mechanical Advantage Ratio	Material Viscosity	Pages
	ElectraFlow™ Plus FloorFix	sachet	1800mL (60.9oz)	3.5kN	18V	low/ medium	62-63

1-Component Dispensers

Product Ranges

Professional dispensing for all application.

	Name/Description	Cartridge / Sachet / Bulk	Cartridge / Sachet / Bulk / Capacity	Maximum Thrust	Pneumatic Pressure	Material Viscosity	Pages
Pneumatic Dispensers							
	AirFlow™ 1 Cartridge	cartridge	310mL (10.5oz)	1.3kN	6.8bar (others available)	low	64-65
	AirFlow™ 1 Sachet	sachet	310mL (10.5oz) 400mL (13.5oz) 600mL (20.3oz)	1.45kN	6.8bar (others available)	low	66-67
	AirFlow™ 1 Combi	cartridge/ sachet	310mL (10.5oz) 400mL (13.5oz) 600mL (20.3oz)	1.45kN	6.8bar (others available)	low	68-69
	AirFlow™ 1 Bulk	bulk	700mL (20.3oz)	1.45kN	6.8bar (others available)	low	74-75
	AirFlow™ 1 Bulk	bulk	2000mL (67.62oz) 3000mL (101.4oz) 4000mL (135.3oz)	3.4kN	6.8bar (others available)	low/ medium	70-71
	AirFlow™ 1 HP Combi	cartridge/ sachet	310mL (10.5oz) 400mL (13.5oz) 600mL (20.3oz)	2.2kN	6.8bar (others available)	high	72-73
	AirFlow™ 2 Cartridge	cartridge	310mL (10.5oz) 400mL (13.5oz)	1.2kN	6.8bar (others available)	low	74-75
	AirFlow™ 2 Sachet	sachet	310mL (10.5oz) 400mL (13.5oz) 600mL (20.3oz)	1.45kN	6.8bar (others available)	low	76-77
	AirFlow™ 2 Combi	cartridge/ sachet	310mL (10.5oz) 400mL (13.5oz) 600mL (20.3oz)	1.45kN	6.8bar (others available)	low	78-79
	AirFlow™ 3 Cartridge	cartridge	310mL (10.5oz) 400mL (13.5oz)	1.5kN	6.8bar (others available)	low/ medium	80-81
	AirFlow™ 3 Quart Cartridge	cartridge	946mL (32.0oz)	1.5kN	6.8bar (others available)	low/ medium	82-83
	AirFlow™ 3 Sachet	sachet	310mL (10.5oz) 400mL (13.5oz) 600mL (20.3oz)	1.5kN	6.8bar (others available)	low/ medium	84-85

	Name/Description	Cartridge / Sachet / Bulk	Cartridge / Sachet / Bulk / Capacity	Maximum Thrust	Pneumatic Pressure	Material Viscosity	Pages
	AirFlow™ 3 Compact Combi	cartridge/ sachet	310mL (10.5oz) 400mL (13.5oz) 600mL (20.3oz)	1.5kN	6.8bar (others available)	low/ medium	86-87
	AirFlow™ 3 HP Combi	cartridge/ sachet	310mL (10.5oz) 400mL (13.5oz) 600mL (20.3oz)	2.5kN	6.8bar (others available)	medium/ high	88-89
	JetFlow™ 3 Cartridge	cartridge	310mL (10.5oz)	1.45kN	6.8bar (others available)	low/ medium	90-91
	JetFlow™ 3 Sachet	sachet	310mL (10.5oz) 400mL (13.5oz) 600mL (20.3oz)	1.45kN	6.8bar (others available)	low/ medium	92-93
	JetFlow™ 3 Compact Combi	cartridge/ sachet	310mL (10.5oz) 400mL (13.5oz) 600mL (20.3oz)	1.45kN	6.8bar (others available)	low/ medium	94-95
	Ultrapoint™ Air	bulk	800mL (27oz)	1.45kN	6.8bar (others available)	low/ medium	96-97

MPD 32

30mL Cartridge Dispenser

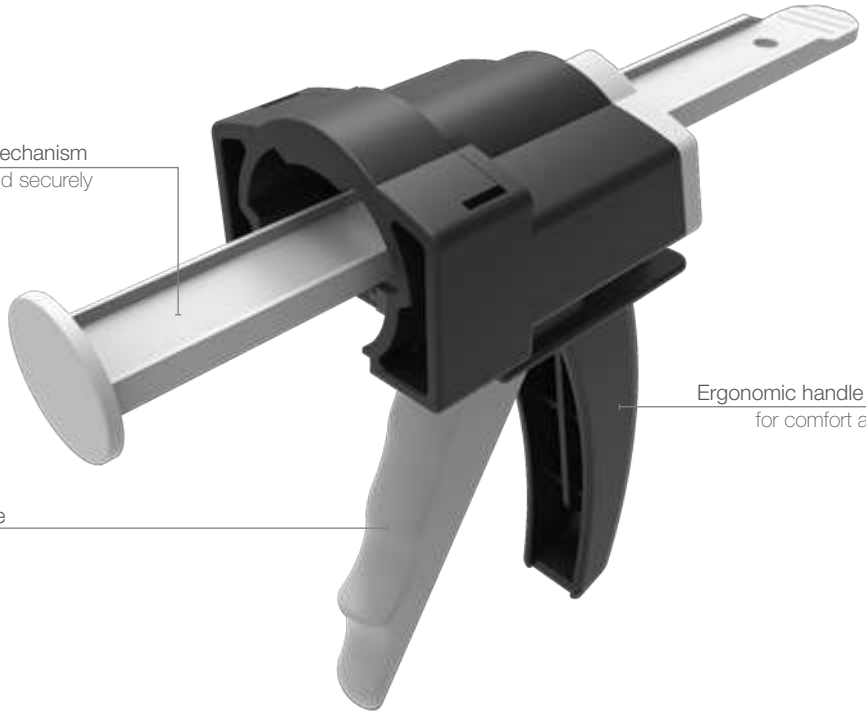

Model shown: MPD 32mL

Features

- Engineered to provide high thrust
- Minimum trigger pressure
- Ergonomic handle and trigger
- Simple breach loading mechanism

Benefits

- Easy comfortable operation
- For effortless use
- For minimum fatigue
- Ensures cartridges are held securely

Applications

Bonding

Crack Repair

Sealing

Product by range

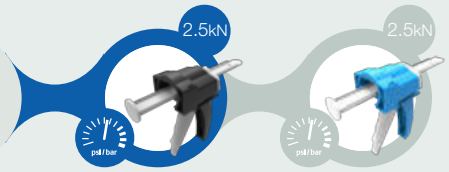

MPD 32 MPD 100

The **MPD 32** 1-component manual dispenser is designed to provide high thrust with minimum trigger pressure. The simple breach loading mechanism ensures cartridges are held securely.

Specifications

- Weight: 0.2kg/0.4lbs
- Frame Length: 210mm/8.3mm
- Maximum Thrust: 2.5kN
- Handle Material: Glass Filled Nylon
- Frame Material: Glass Filled Nylon
- Tool Component Approvals: REACH
- Cartridge Capacity: 30mL (1.0oz)
- Mechanical Advantage Ratio:16:1
- Viscosity: Low/Medium
- Standard Color: Grey/Black
- Customized Versions: Yes

Dimensions

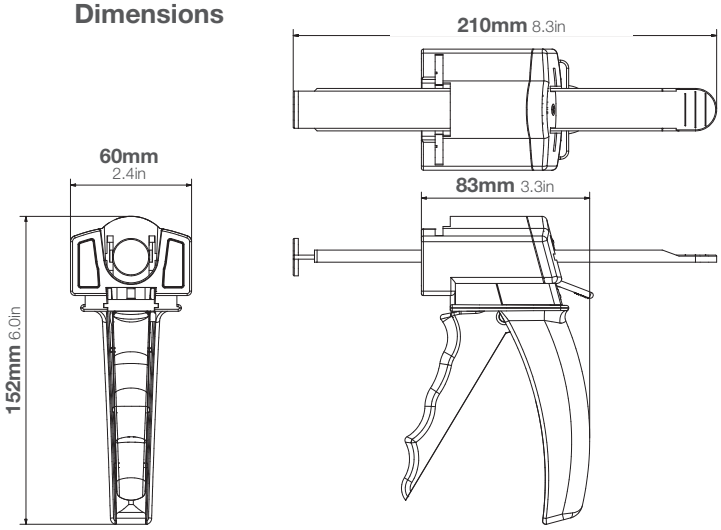

Part number:
DM1C 032-ca-r16-001

Article number:
178299

Packaging:
50 per Box

Matching MIXPAC™ cartridges

-

Compatible cartridges

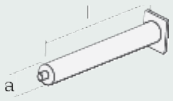

Plastic Cartridge
30mL HDPE

	mm	inch
l	116.0	4.56
a	Ø25.4	Ø1.0

Conversion kits

-

Matching accessories

-

MPD 100

50/80mL Cartridge Dispenser

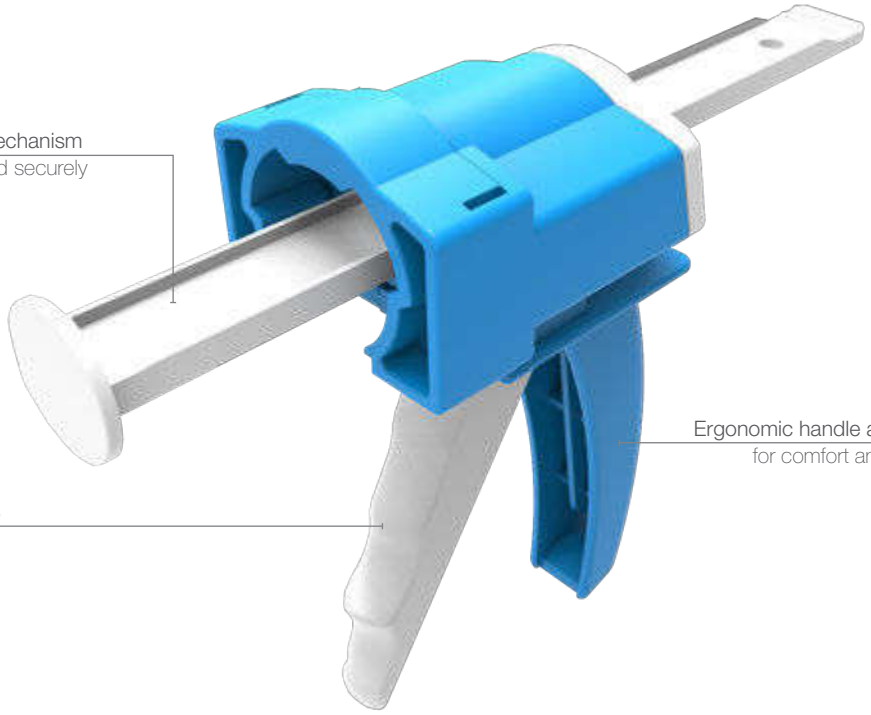

Model shown: MPD 100mL

Features

- Engineered to provide high thrust
- Minimum trigger pressure
- Ergonomic handle and trigger
- Simple breach loading mechanism

Benefits

- Easy comfortable operation
- For effortless use
- For minimum fatigue
- Ensures cartridges are held securely

Applications

Bonding

Product by range

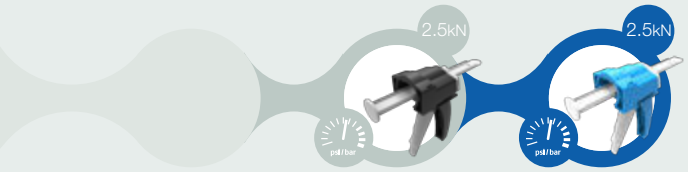

MPD 32 **MPD 100**

The **MPD 100** 1-component manual dispenser is designed for use with low to medium viscosity sealants and adhesives and engineered to provide high thrust with minimum trigger pressure for effortless use.

Specifications

- Weight: 0.2kg/0.4lbs
- Frame Length: 222mm/8.7in
- Maximum Thrust: 2.5kN
- Handle Material: Glass Filled Nylon
- Frame Material: Glass Filled Nylon
- Tool Component Approvals: REACH
- Cartridge Capacity: 50mL (1.8oz), 80mL (2.7oz)
- Mechanical Advantage Ratio:16:1
- Viscosity: Low/Medium
- Standard Color: Grey/Blue
- Customized Versions: Yes

Dimensions

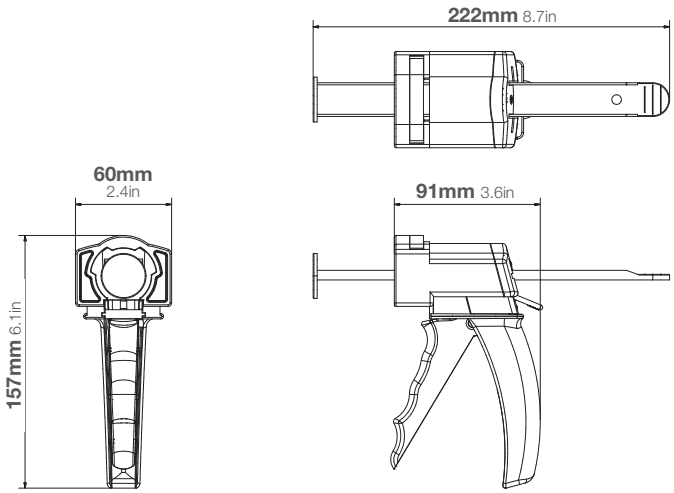

Part number:
DM1C 100-ca-r16-001

Article number:
178303

Packaging:
50 per Box

Matching MIXPAC™ cartridges

-

Compatible cartridges

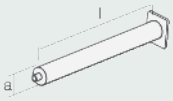

Plastic Cartridge
50mL HDPE

	mm	inch
l	173.0	6.8
a	Ø25.4	Ø1.0

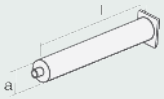

Plastic Cartridge
80mL HDPE

	mm	inch
l	145.0	5.7
a	Ø30.8	Ø1.2

Conversion kits

-

Matching accessories

-

EasiFlow™ HD Lite

310mL Cartridge Dispenser

Model shown: EasiFlow HD Lite 310mL

Features

- Built-in Pressure Relief Device (PRD)
- Glass fiber reinforced nylon frame and handle
- Built in cartridge support strap
- Curved rod end
- Spike (US only)

Benefits

- Stops material flow when trigger is released
- Lightweight and highly durable
- Helps securely position and retain the cartridge
- For convenient tool support and storage
- For piercing barrier in cartridges

Applications

Bonding

Sealing

Product by range

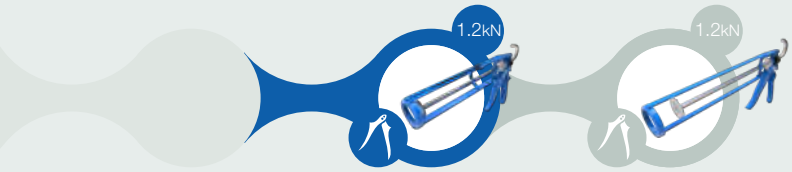

The **EasiFlow HD Lite** 1-component manual dispenser is a lightweight highly durable dispenser with built-in Pressure Relief Device which stops material flow once trigger is released.

Specifications

- Weight: 0.32kg / 0.71lbs
- Frame Length: 234mm / 9.21in
- Maximum Thrust: 1.2kN
- Pressure Relief Device (PRD)
- Handle Material: Glass Fiber Reinforced Nylon
- Frame Material: Glass Fiber Reinforced Nylon
- Tool Component Approvals: REACH
- Cartridge Capacity: 310mL (10.5oz)
- Mechanical Advantage Ratio: (7:1)
- Standard Color: Blue
- Nozzle Dimension: ø41mm / 1.61in
- Customized versions on demand

Dimensions

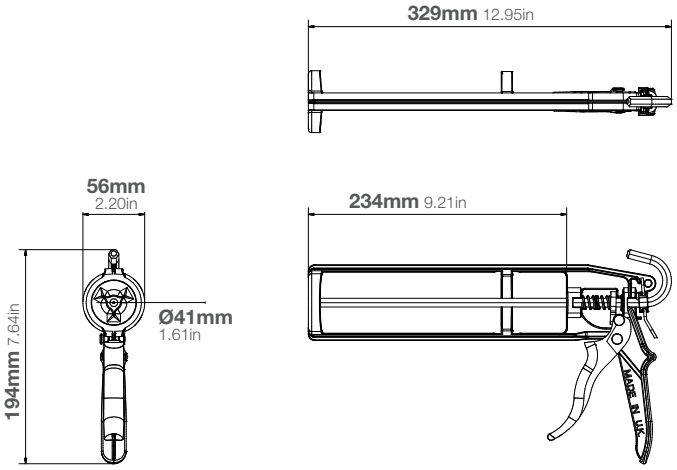

Product:
DM1C 310-ca-r7-201

Article number:
177933 (21001 for US)

Packaging:
25 units per Box (12 per Box for US)

Matching MIXPAC™ cartridges

-

Compatible cartridges

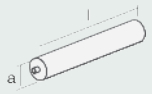

Plastic Cartridge
310mL HPDE/PP/PA

	mm	inch
l	216.0	8.5
a	Ø 48.2	Ø 1.8

Conversion kits

-

Matching accessories

Nozzle extension / Twisty nozzle on pages 98-102.

EasiFlow™ HD

310/400mL Cartridge Dispenser

Model shown: EasiFlow HD 400mL

Features

- Built-in Pressure Relief Device (PRD)
- Epoxy coated steel handle and frame
- Curved rod end
- Spike (US only)

Benefits

- Stops material flow when trigger is released
- Lightweight and highly durable
- For convenient tool support and storage
- For piercing barrier in cartridges

Applications

Bonding

Sealing

Product by range

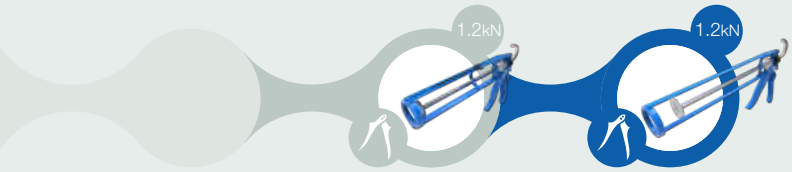

The **EasiFlow HD** 1-component manual dispenser is designed for use with low viscosity sealants and adhesives while the Pressure Relief Device (PRD) prevents run-on.

Specifications

- Weight: 0.51-0.54kg / 1.1-1.2lbs
- Frame Length: 231mm-268mm / 9.1in-10.5in
- Maximum Thrust: 1.2kN
- Pressure Relief Device (PRD)
- Handle Material: Epoxy Coated Steel
- Frame Material: Epoxy Coated Steel
- Tool Component Approvals: REACH
- Cartridge Capacity: 310mL (10.5oz), 400mL (13.5oz)
- Mechanical Advantage Ratio: (7:1)
- Standard Color: Blue
- Nozzle Dimension: ø41mm / 1.61in
- Customized versions on demand

Dimensions (mm/in)

product	height (h)	length (l)	depth (d)	frame (f)
HD 310	187 /8.4	328 /13.3	54 /2.3	231 /9.1
HD 400	187 /8.4	368 /14.7	54 /2.3	268 /10.5

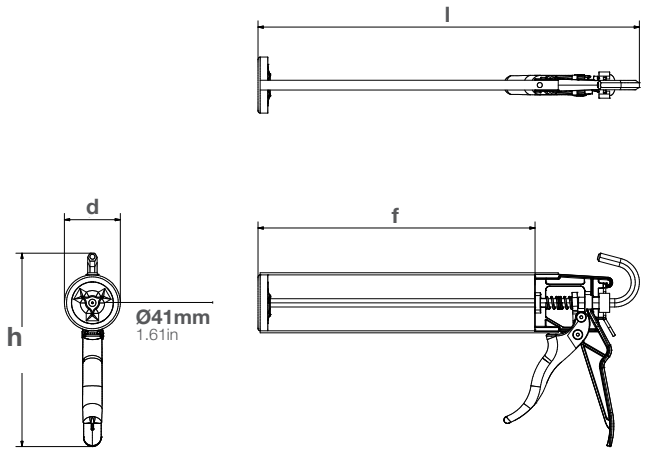

Product:	Article number:	Packaging:
DM1C 310-ca-r7-001	177078 (41001 for US)	25 per Box (12 per Box for US)
DM1C 400-ca-r7-001	177094	25 per Box

Matching MIXPAC™ cartridges

-

Compatible cartridges

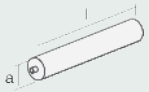

Plastic Cartridge
310mL HPDE/PP/PA

	mm	inch
l	216.0	8.5
a	Ø 48.2	Ø 1.8

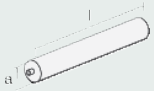

Plastic Cartridge
400mL HPDE/PA

	mm	inch
l	256.0	10.0
a	Ø 49.0	Ø 1.9

Conversion kits

-

Matching accessories

Nozzle extension / Twisty nozzle on pages 98-102.

MidiFlow™ Cartridge

310/400mL Cartridge Dispenser

Model shown: MidiFlow Cartridge 400mL

Features

- Ergonomically designed handle
- U-opening rotating steel frame
- Curved rod end
- Wear compensation sleeve

Benefits

- Lightweight highly durable
- Ease of cartridge insertion and removal
- Convenient tool support and storage
- For increased durability

Applications

Bonding

Sealing

Product by range

MidiFlow Cartridge

MidiFlow Combi

The **MidiFlow** 1-component manual dispenser is a lightweight highly durable dispenser with u-opening steel frame for easy insertion and removal of cartridges.

Specifications

- Weight 0.67kg / 1.5lbs
- Frame Length: 271mm / 10.67in
- Maximum Thrust: 1.5kN
- Handle Material: Glass Fiber Reinforced Nylon
- Frame Material: Epoxy Coated Steel
- Tool Component Approvals: REACH
- Cartridge Capacity: 310mL (10.5oz), 400mL (13.5oz)
- Mechanical Advantage Ratio: (10:1)
- Standard Color: Blue/Grey
- Nozzle Dimension: ø26-ø31mm / 1.02-1.22in
- Customized versions on demand

Dimensions

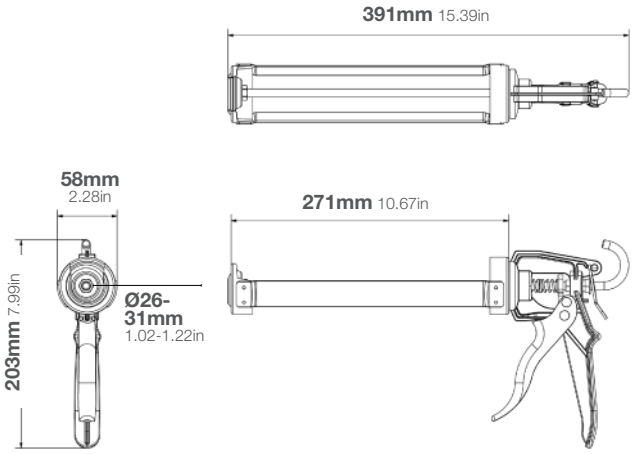

Product:
DM1C 400-ca-r10-001

Article number:
181192

Packaging:
10 per Box

Matching MIXPAC™ cartridges

-

Compatible cartridges

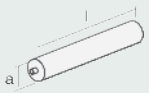

Plastic Cartridge
310mL HPDE/PP/PA

	mm	inch
l	216.0	8.5
a	Ø 48.2	Ø 1.8

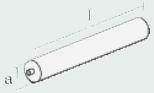

Plastic Cartridge
400mL HPDE/PA

	mm	inch
l	256.0	10.0
a	Ø 49.0	Ø 1.9

Conversion kits

-

Matching accessories

Nozzle extension / twisty nozzle on pages 98-102.

MidiFlow™ Combi

310-600mL Cartridge & Sachet Dispenser

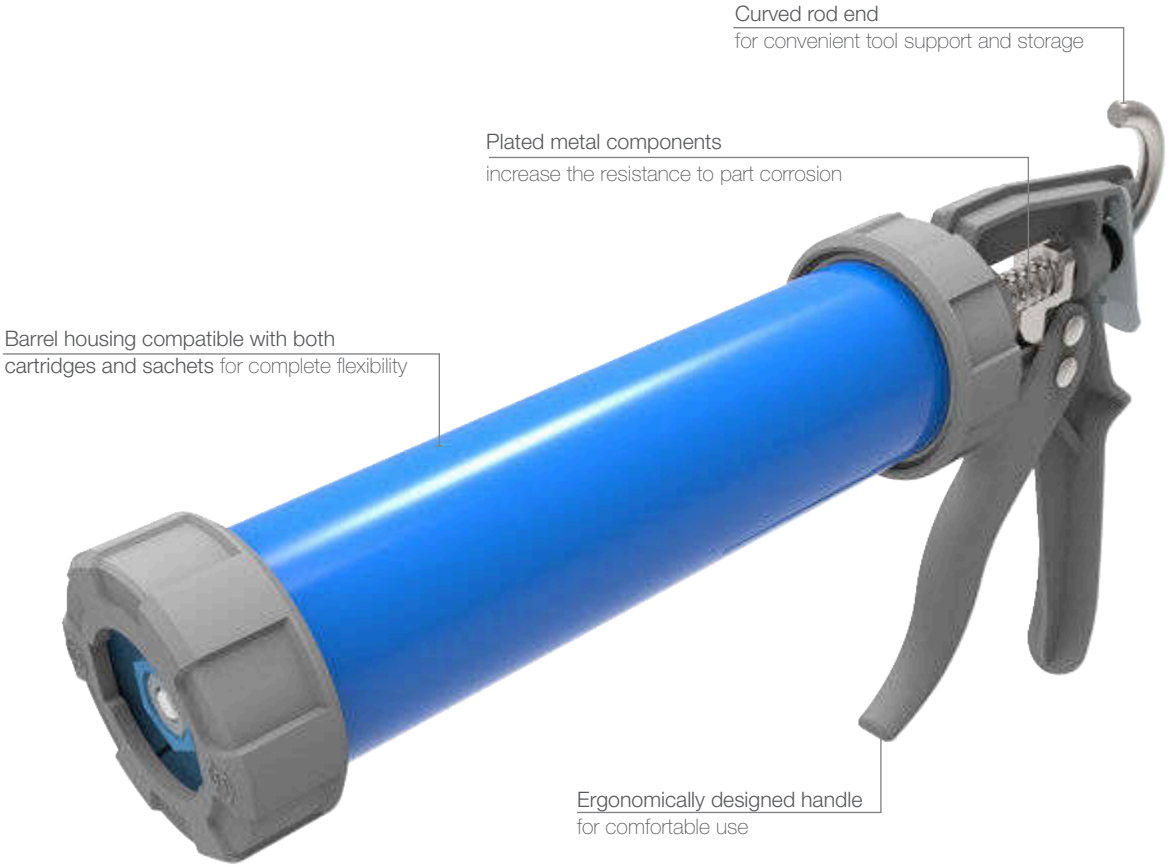

Model shown: MidiFlow Combi 600mL

Features

- Ergonomically designed handle
- Barrel housing for cartridges and sachets
- Curved rod end
- Surface hardened catch plate and rod design

Benefits

- Lightweight highly durable
- Gives you complete flexibility
- For convenient tool support and storage
- Maintains high material output

Applications

Bonding

Sealing

Product by range

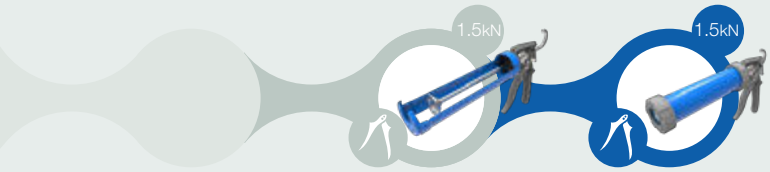

The **MidiFlow Combi** 1-component manual dispenser is compatible with both cartridges and sachets allowing the user complete flexibility between sealant systems.

Specifications

- Weight: 0.58kg / 1.3lbs
- Barrel Length: 377mm / 14.84in
- Maximum Thrust: 1.5kN
- Handle Material: Glass Fiber Reinforced Nylon
- Barrel Material: ABS Polymer
- Tool Component Approvals: REACH
- Cartridge Capacity: 310mL (10.5oz), 400mL (13.5oz)
- Sachet Capacity: 310mL (10.5oz), 400mL (13.5oz) 600mL (20.3oz)
- Mechanical Advantage Ratio: (10:1)
- Standard Color: Blue/Grey
- Nozzle Dimension: ø38mm / 1.5in
- Customized versions on demand

Dimensions

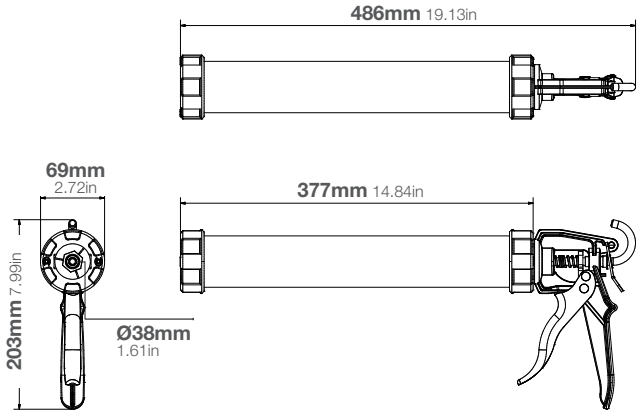

Product:
DM1C 600-cm-r10-001

Article number:
159906 (31001-600 for US)

Packaging:
10 per Box (3 per Box for US)

Matching MIXPAC™ cartridges

-

Compatible cartridges and sachets

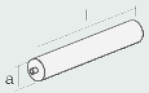

Plastic Cartridge
310mL HPDE/PP/PA

	mm	inch
l	216.0	8.5
a	Ø 48.2	Ø 1.8

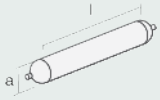

Sachet
310mL

	mm	inch
l	220.0	8.66
a	Ø 50.0	Ø 1.97

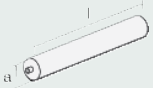

Plastic Cartridge
400mL HPDE/PA

	mm	inch
l	256.0	10.0
a	Ø 49.0	Ø 1.9

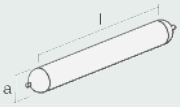

Sachet
400mL

	mm	inch
l	258.0	10.16
a	Ø 50.0	Ø 1.97

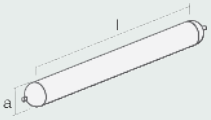

Sachet
600mL

	mm	inch
l	335.0	13.19
a	Ø 50.0	Ø 1.97

Conversion kits

-

Matching accessories

Nozzle extension/twisty nozzle/yellow cone / white cone nozzle on pages 98-102.

PowerFlow™ Cartridge

310/400mL Cartridges Dispenser

Model shown: PowerFlow Cartridge 310mL

Features

- High quality epoxy coated cast aluminum handle
- U-opening steel frame
- Curved rod end
- Switchable Pressure Relief Device (PRD)
- Rotating Frame
- Spike (US only)

Benefits

- Powerful and highly durable
- For ease of cartridge insertion and removal
- Creates convenient tool support and storage
- Prevents material run-on
- For easy cartridge insertion and allows continuous bead around corners
- For piercing barrier in cartridges

Applications

Bonding

Sealing

Product by range

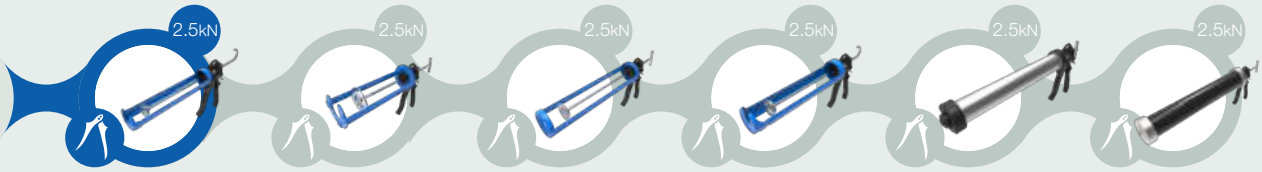

PowerFlow Cartridge | PowerFlow 1000S | PowerFlow 1000L | PowerFlow Quart | PowerFlow Combi | PowerFlow Bulk

The **PowerFlow Cartridge** 1-component manual dispenser is part of a range of high powered dispensers designed for use with low to medium viscosity sealants and adhesives.

Specifications

- Weight: 0.75-0.79kg / 1.65-1.74lbs
- Frame Length: 233mm-274mm / 9.3in-15.0in
- Maximum Thrust: 2.5kN
- Pressure Relief Device (PRD)
- Handle Material: Epoxy Coated Aluminum
- Frame Material: Epoxy Coated Steel
- Tool Component Approvals: REACH
- Cartridge Capacity: 310mL (10.5oz), 400mL (13.5oz)
- Mechanical Advantage Ratio: (12:1)
- Standard Color: Blue/Black
- Nozzle Dimension: ø27-31mm / 1.1-1.2in
- Customized versions on demand

Dimensions (mm/in)

product	height (h)	length (l)	depth (d)	frame (f)
Cartridge 310	213 /8.4	334 /13.1	58.5 /2.3	233 /9.3
Cartridge 400	213 /8.4	391 /15.3	58.3 /2.3	274 /10.8

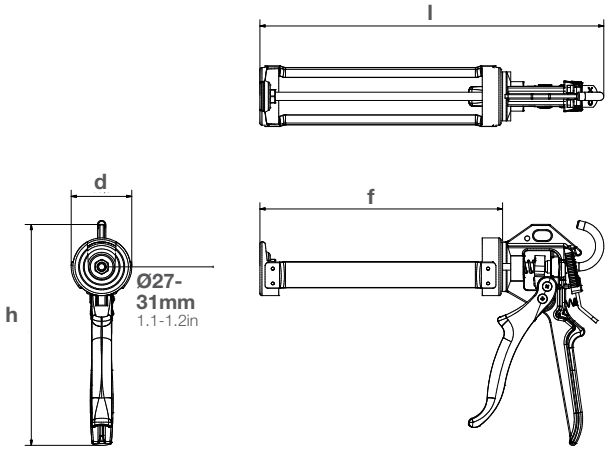

Product:	Article number:	Packaging:
DM1C 310-ca-r12-101	177168 (41004 for US)	10 per Box (6 per Box for US)
DM1C 400-ca-r12-001	177180	10 per Box

Matching MIXPAC™ cartridges

Peeler Cartridge
310 mL

Compatible cartridges

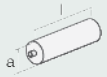

Plastic Cartridge
150mL HDPE

	mm	inch
l	124.5	4.9
a	Ø 48.7	Ø 1.9

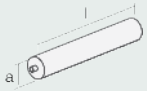

Plastic Cartridge
310mL HPDE/PP/PA

	mm	inch
l	216.0	8.5
a	Ø 48.2	Ø 1.8

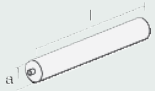

Plastic Cartridge
400mL HPDE/PA

	mm	inch
l	256.0	10.1
a	Ø 49.0	Ø 1.9

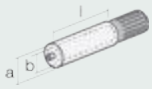

Plastic Cartridge
150mL 1:1, 2:1, 10:1 PP

		mm	inch
	l	117	4.6
	a	Ø 50.0	Ø 1.9
1:1	b	Ø 32.0	Ø 1.2
2:1	b	Ø 26.0	Ø 1.0
10:1	b	Ø 14.3	Ø 0.5

Conversion kits

-

Matching accessories

Nozzle extension / Twisty nozzle on pages 98-102.

PowerFlow™ 1000S

1000mL Cartridge Dispenser

Model shown: PowerFlow Cartridge1000S 1000mL

Features

- High quality epoxy coated cast aluminum handle
- U-opening steel frame
- Rotating steel frame
- Switchable Pressure Relief Device (PRD)

Benefits

- Powerful and highly durable
- Ease of cartridge insertion and removal
- Allows continuous bead around corners
- Prevents material run-on

Applications

Bonding

Sealing

Product by range

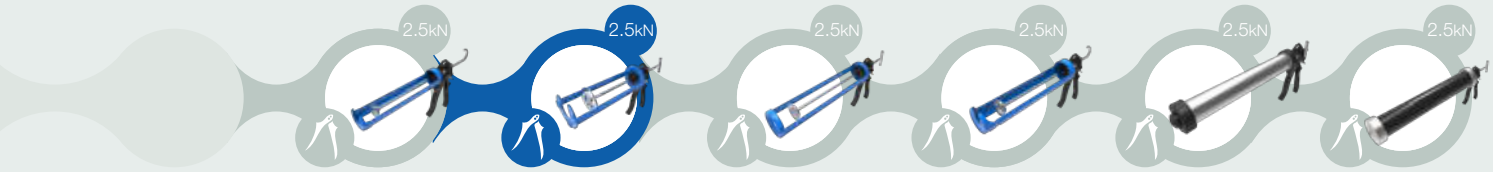

PowerFlow Cartridge | **PowerFlow 1000S** | PowerFlow 1000L | PowerFlow Quart | PowerFlow Combi | PowerFlow Bulk

The **PowerFlow 1000S** 1-component manual dispensers u-opening steel frame allows for easy insertion and removal of cartridges while the switchable Pressure Relief Device (PRD) prevents material run-on.

Specifications

- Weight: 1.12kg / 2.46lbs
- Frame Length: 256mm / 10.08in
- Maximum Thrust: 2.5kN
- Pressure Relief Device (PRD)
- Handle Material: Epoxy Coated Aluminum
- Frame Material: Epoxy Coated Steel
- Tool Component Approvals:REACH
- Cartridge Capacity: 1000mL (33.8oz)
- Mechanical Advantage Ratio: (12:1)
- Standard Color: Blue/Black
- Nozzle Dimension: ø38mm / 1.5in
- Customized versions on demand

Dimensions

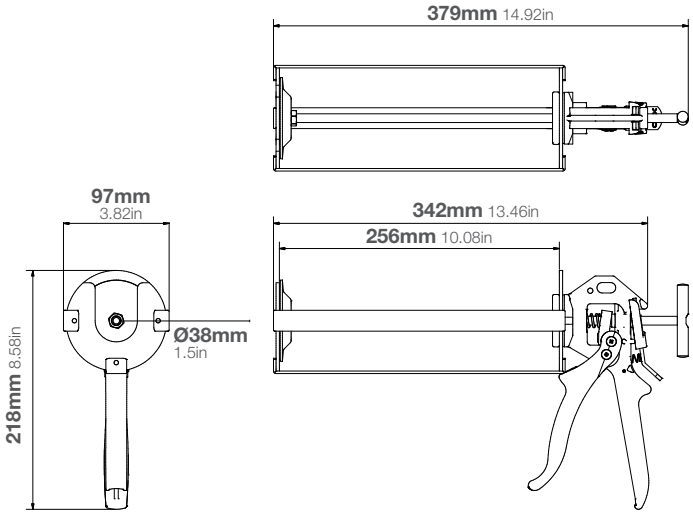

Product:
DM1C 1000-ca-r12-001

Article number:
177298

Packaging:
1 per Box

Matching MIXPAC™ cartridges

-

Compatible cartridges

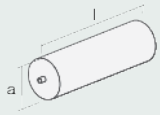

Plastic Cartridge
1000mL HPDE

	mm	inch
l	211.5	8.3
a	Ø 88.4	Ø 3.4

Conversion kits

-

Matching accessories

Nozzle extension / Twisty nozzle on pages 98-102.

PowerFlow™ 1000L

1000mL Cartridge Dispenser

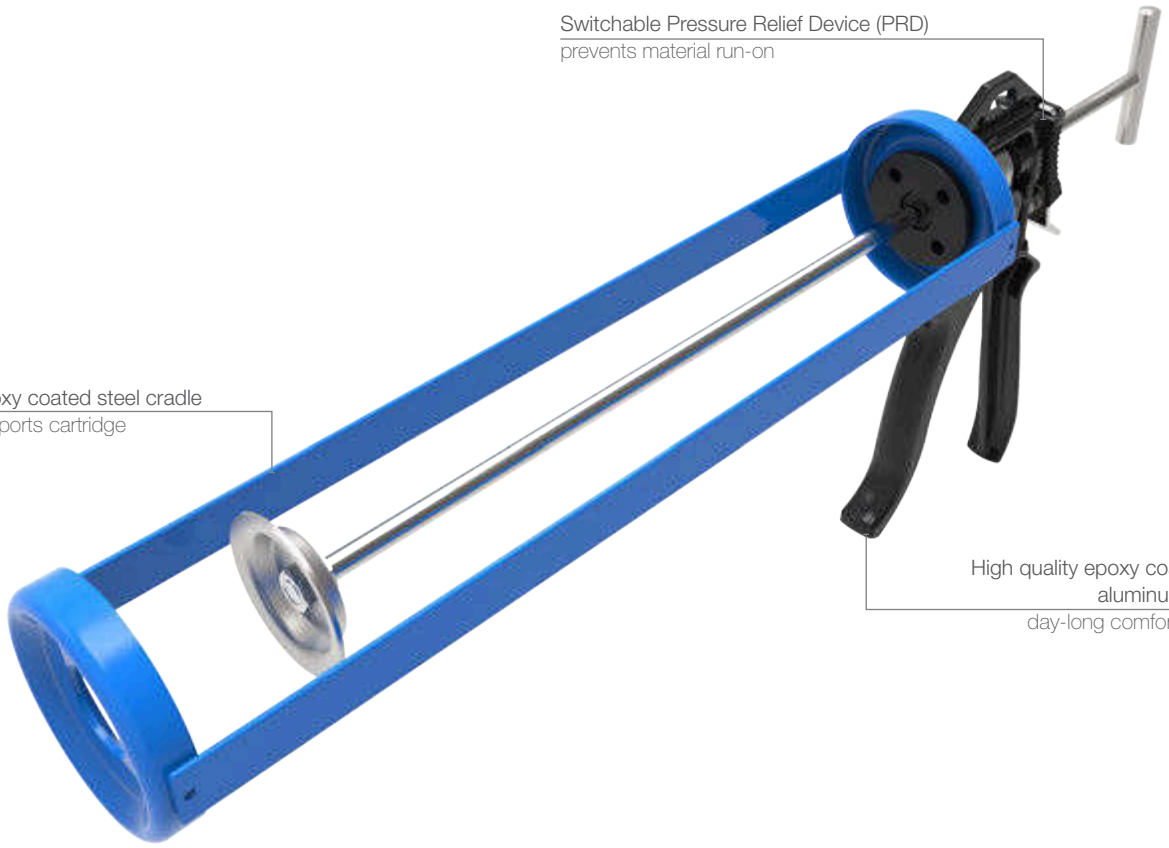

Model shown: PowerFlow 1000L 1000mL

Features

- High quality epoxy coated cast aluminum handle
- Epoxy coated steel cradle
- Switchable Pressure Relief Device (PRD)

Benefits

- Powerful and highly durable
- Lightweight and highly durable
- Prevents material run on

Applications

Bonding

Sealing

Product by range

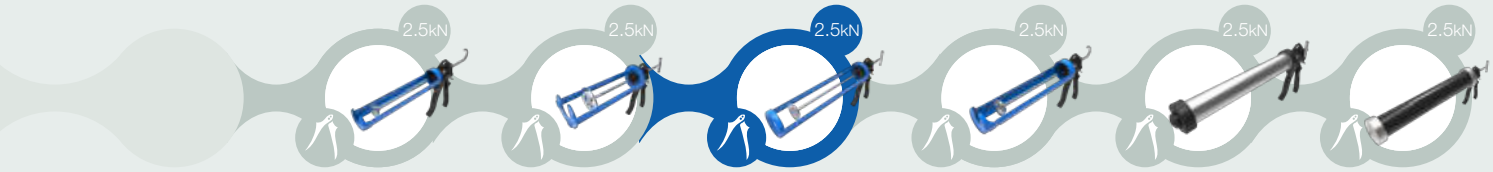

PowerFlow Cartridge | PowerFlow 1000S | **PowerFlow 1000L** | PowerFlow Quart | PowerFlow Combi | PowerFlow Bulk

The **PowerFlow 1000L** 1-component manual dispenser designed for use with low to medium viscosity sealants and adhesives with u-opening steel frame for easy insertion and removal of cartridges.

Specifications

- Weight: 1.12kg / 2.46lbs
- Frame Length: 324mm / 12.8in
- Maximum Thrust: 2.5kN
- Pressure Relief Device (PRD)
- Handle Material: Epoxy Coated Aluminum
- Frame Material: Epoxy Coated Steel
- Tool Component Approvals:REACH
- Cartridge Capacity: 1000mL (33.8oz)
- Mechanical Advantage Ratio: (12:1)
- Viscosity: Low/Medium
- Standard Color: Blue/Black
- Nozzle Dimension: ø38mm / 1.5in
- Customized versions on demand

Dimensions

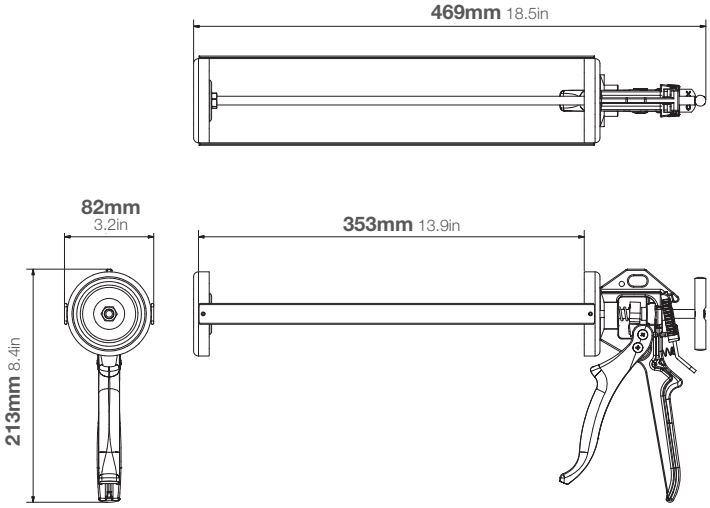

Product:
DM1C 1000-ca-r12-11

Article number:
177261

Packaging:
1 per Box

Matching MIXPAC™ cartridges

-

Compatible cartridges

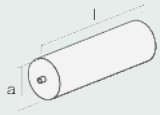

Plastic Cartridge
1000mL HPDE

	mm	inch
l	211.5	8.3
a	Ø 88.4	Ø 3.4

Conversion kits

-

Matching accessories

Nozzle extension / Twisty nozzle on pages 98-102.

PowerFlow™ Quart

946mL Cartridge Dispenser

Model shown: PowerFlow Quart Cartridge 946mL

Features

- High quality epoxy coated cast aluminum handle
- U-opening steel frame
- Curved rod end
- Switchable Pressure Relief Device (PRD)
- Rotating Frame
- Spike (US only)

Benefits

- Powerful and highly durable
- Ease of cartridge insertion and removal
- Creates convenient tool support and storage
- Prevents material run-on
- For easy cartridge insertion and allows continuous bead around corners
- For piercing barrier in cartridges

Applications

Bonding

Sealing

Product by range

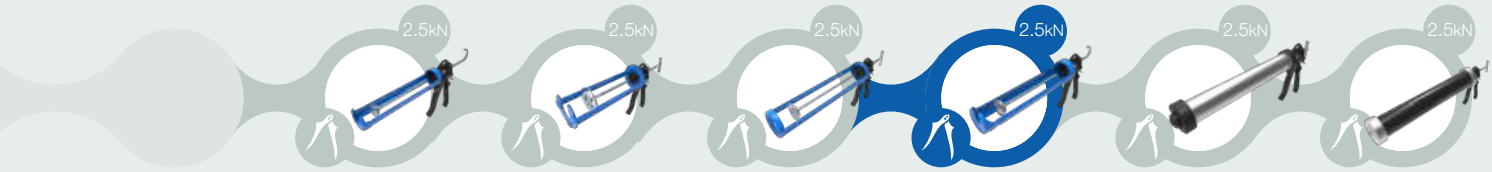

PowerFlow Cartridge | PowerFlow 1000S | PowerFlow 1000L | **PowerFlow Quart** | PowerFlow Combi | PowerFlow Bulk

The **PowerFlow Quart** 1-component manual dispenser is a light weight highly durable dispenser with rotating u-opening steel frame for easy insertion and removal of cartridges.

Specifications

- Weight: 0.79kg / 1.7lbs
- Frame Length: 274mm / 10.78in
- Maximum Thrust: 2.5kN
- Pressure Relief Device (PRD)
- Handle Material: Epoxy Coated Aluminum
- Frame Material: Epoxy Coated Steel
- Tool Component Approvals: REACH
- Cartridge Capacity: 946mL (32oz)
- Mechanical Advantage Ratio: (12:1)
- Standard Color: Blue/Black
- Nozzle Dimension: ø38mm / 1.5in
- Customized versions on demand

Dimensions

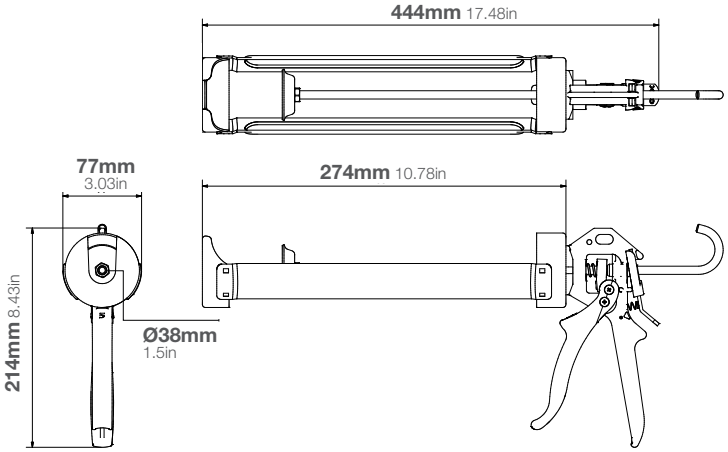

Product:
Quart Cartridge

Article number:
41002 for US

Packaging:
3 per Box

Matching MIXPAC™ cartridges

-

Compatible cartridges

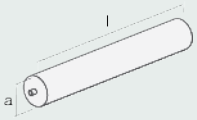

Plastic Cartridge-Quart
946mL

	mm	inch
l	320	12.6
a	Ø 67.0	Ø 2.6

Conversion kits

-

Matching accessories

Nozzle extension / Twisty nozzle on pages 98-102.

PowerFlow™ Combi

310-600mL Cartridge & Sachet Dispenser

Model shown: PowerFlow Combi 600mL

Features

- High quality epoxy coated cast aluminum handle
- Anodized aluminum barrel
- Switchable Pressure Relief Device (PRD)
- Contoured handle and trigger grip

Benefits

- Lightweight and highly durable
- Easily converted from cartridge to sachet
- Prevents material run-on
- For ease of use

Applications

Bonding

Sealing

Product by range

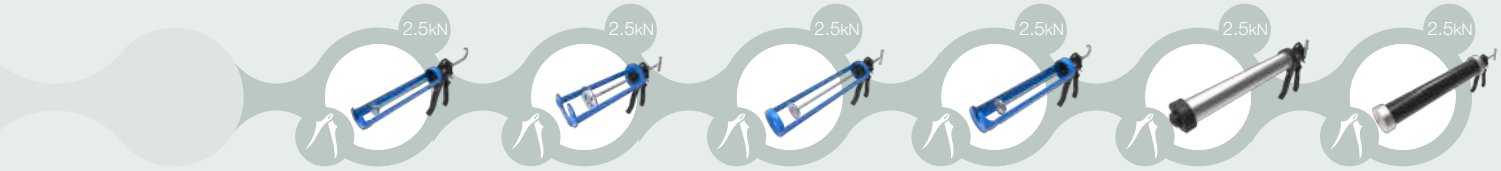

PowerFlow Cartridge | PowerFlow 1000S | PowerFlow 1000L | PowerFlow Quart | **PowerFlow Combi** | PowerFlow Bulk

The **PowerFlow Combi** 1-component manual dispenser designed for use with low to medium viscosity sealants and compatible with both cartridges and sachets.

Specifications

- Weight: 0.9-1.1kg / 2.0-2.3lbs
- Barrel Length: 236mm-389mm / 9.3in-15.3in
- Maximum Thrust: 2.5kN
- Handle Material: Epoxy Coated Aluminum
- Barrel Material: Anodized Aluminum
- Barrel Type: Anodized Aluminum / Clear Plastic
- Tool Component Approvals: REACH
- Cartridge Capacity: 310mL (10.5oz), 400mL (13.5oz)
- Sachet Capacity: 310ml (10.5oz), 400mL (13.5oz), 600mL (20.3oz)
- Mechanical Advantage Ratio: (12:1)
- Standard Color: Black/Grey
- Nozzle Dimension: ø38mm / 1.5in
- Customized versions on demand

Dimensions (mm/in)

product	height (h)	length (l)	depth (d)	barrel (b)
Combi 310	213 /8.4	337 /13.3	69 /2.7	236 /9.3
Combi 400	213 /8.4	381 /14.7	69 /2.7	282 /11.1
Combi 600	213 /8.4	488 /19.0	69 /2.7	389 /15.3

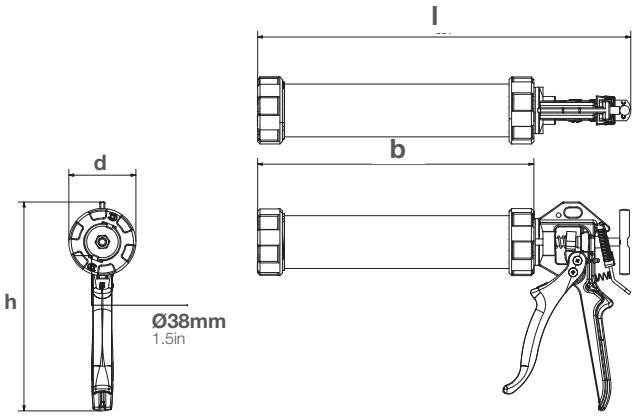

Product:	Article number: Anodized Aluminium Barrel	Clear Plastic Barrel	Packaging:
DM1C 310-cm-r12-021	177312 / 51000 (for US)	-	1 per Box
DM1C 310-cm-r12-001	177313	-	10 per Box
DM1C 310-cm-r12-101	-	177315	10 per Box
DM1C 400-cm-r12-002	177328 / 51000-400 (for US)	-	1 per Box
DM1C 400-cm-r12-001	177329	-	10 per Box
DM1C 400-cm-r12-101	-	177331	10 per Box
DM1C 600-cm-r12-052	177353		1 per Box
DM1C 600-cm-r12-001	177354		10 per Box
DM1C 600-cm-r12-101		177356	10 per Box

Matching MIXPAC™ cartridges

Peeler Cartridge
310 mL

Compatible cartridges and sachets

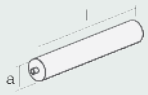

Plastic Cartridge
310mL HPDE/PP/PA

	mm	inch
l	216.0	8.5
a	Ø48.2	Ø 1.8

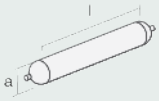

Sachet
310mL

	mm	inch
l	220.0	8.66
a	Ø 50.0	Ø 1.97

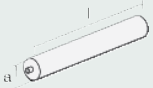

Plastic Cartridge
400mL HPDE/PA

	mm	inch
l	256.0	10.1
a	Ø 49.0	Ø 1.9

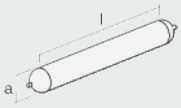

Sachet
400mL

	mm	inch
l	258.0	10.16
a	Ø 50.0	Ø 1.97

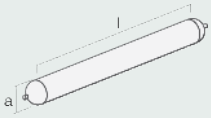

Sachet
600mL

	mm	inch
l	335.0	13.2
a	Ø 50.0	Ø 2.0

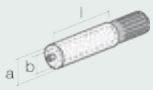

Plastic Cartridge
150mL 1:1, 2:1, 10:1 PP

		mm	inch
	l	117	4.6
	a	Ø 50.0	Ø 1.9
1:1	b	Ø 32.0	Ø 1.2
2:1	b	Ø 26.0	Ø 1.0
10:1	b	Ø 14.3	Ø 0.5

Conversion kits

-

Matching accessories

Nozzle extension / Twisty nozzle / White Cone / Yellow Cone on pages 98-102.

PowerFlow™ Bulk

2000/3000/4000mL Dispenser

Model shown: PowerFlow Bulk 4000mL

Features

- Epoxy coated cast aluminum handle
- Quick release aluminum end caps
- Switchable Pressure Relief Device (PRD)

Benefits

- For fast, efficient dispensing
- No-loss trigger action for fast, efficient dispensing
- Prevents material run-on

Applications

Bonding

Sealing

Product by range

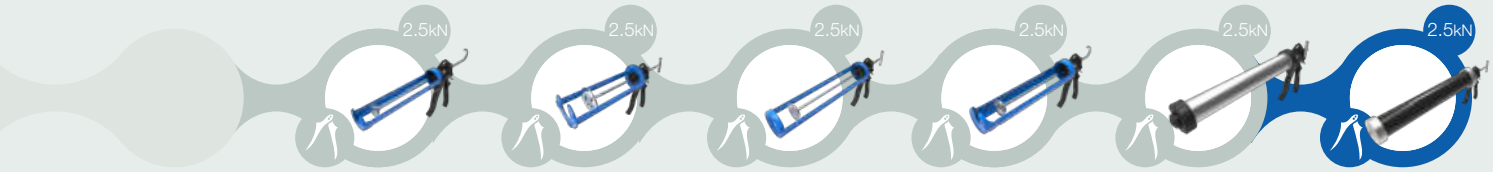

PowerFlow Cartridge | PowerFlow 1000S | PowerFlow 1000L | PowerFlow Quart | PowerFlow Combi | **PowerFlow Bulk**

The **PowerFlow Bulk** 1-component manual dispenser is a highly durable dispenser with epoxy coated steel barrel for fast, efficient dispensing.

Specifications

- Weight: 3.1-4.5kg / 6.9-9.9lbs
- Barrel Length: 529mm-935mm / 20.8in-36.8in
- Maximum Thrust: 2.5kN
- Pressure Relief Device (PRD)
- Handle Material: Epoxy Coated Cast Aluminum
- Barrel Material: Epoxy Coated Steel
- Tool Component Approvals: REACH
- Mechanical Advantage Ratio: (12:1)
- Bulk Material Capacity: 2000mL, 4000mL
- Special Barrel Length: available upon request
- Standard Color: Black
- Customized versions on demand

Dimensions (mm/in)

product	height (h)	length (l)	depth (d)	barrel (b)
Bulk 2L	222 /8.7	685 /27.0	99 /3.9	529 /20.8
Bulk 3L	222 /8.7	l 939 /37.0	99 /3.9	783 /30.8
Bulk 4L	222 /8.7	1087 /42.8	99 /3.9	935 /36.8

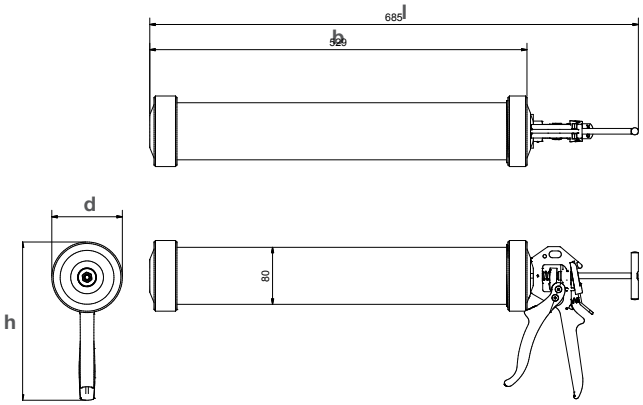

Product:	Article number:	Packaging:
DM1C 2000-bu-r12-001	178018	1 per Box
DM1C 3000-bu-r12-001	178019	1 per Box
DM1C 4000-bu-r12-001	178020	1 per Box

Matching MIXPAC™ cartridges

-

Compatible cartridges

Bulk
400-4000mL

Conversion kits

-

Matching accessories

Carrying handle / nozzles on pages 98-102.

PowerFlow™ HP Cartridge

310/400mL Cartridge Dispenser

Model shown: PowerFlow HP Cartridge 310mL

Features

- High quality epoxy coated cast aluminum handle
- U-opening steel frame
- Curved rod end
- Switchable Pressure Relief Device (PRD)
- Rotating Frame
- Spike (US only)

Benefits

- Powerful and highly durable
- Ease of cartridge insertion and removal
- Creates convenient tool support and storage
- Prevents material run-on
- For easy cartridge insertion and allows continuous bead around corners
- For piercing barrier in cartridges

Applications

Bonding

Sealing

Product by range

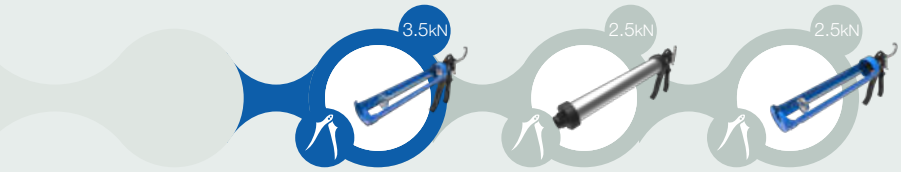

PowerFlow HP Cartridge | PowerFlow HP Combi | PowerFlow HP Quart

The **PowerFlow HP** 1-component manual is a high powered dispenser with u-opening rotating steel frame for easy insertion and removal of cartridges.

Specifications

- Weight: 0.8-0.9kg / 1.7-2.1lbs
- Frame Length: 233mm-271mm / 9.2in-10.7in
- Maximum Thrust: 3.5kN
- Pressure Relief Device (PRD)
- Handle Material: Epoxy Coated Aluminum
- Frame Material: Epoxy Coated Steel
- Tool Component Approvals: REACH
- Cartridge Capacity: 310mL (10.5oz), 400mL (13.5oz)
- Mechanical Advantage Ratio: (18:1)
- Standard Color: Blue/Black
- Nozzle Dimension: ø25mm / 0.98in
- Customized versions on demand

Dimensions (mm/in)

product	height (h)	length (l)	depth (d)	frame (f)
Cart. 310 HP	217 /8.5	334 /13.1	58.5 /2.3	233 /9.2
Cart. 400 HP	217 /8.5	391 /15.3	58.3 /2.3	271 /10.7

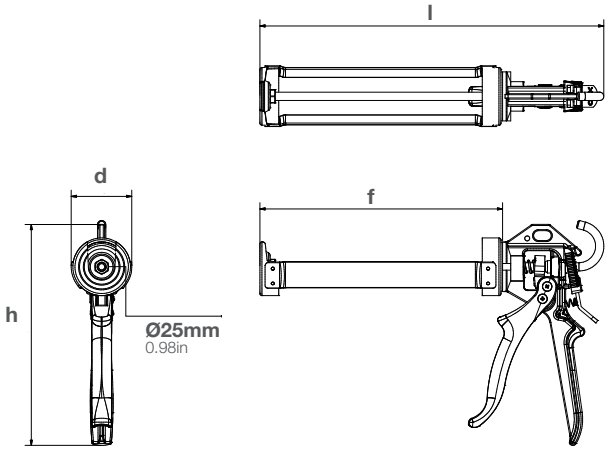

Product:	Article number:	Packaging:
DM1C 310-ca-r18-001	177229 (41004-XT for US)	1 per Box (6 per Box for US)
DM1C 400-ca-r18-001	177247	10 per Box

Matching MIXPAC™ cartridges

Peeler Cartridge
310 mL

Compatible cartridges

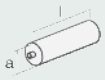

Plastic Cartridge
150mL HPDE/PA

	mm	inch
l	124.5	4.9
a	Ø 48.7	Ø 1.9

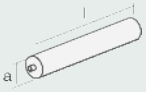

Plastic Cartridge
310mL HPDE/PP/PA

	mm	inch
l	216.0	8.5
a	Ø 48.2	Ø 1.8

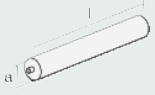

Plastic Cartridge
400mL HPDE/PA

	mm	inch
l	256.0	10.1
a	Ø 49.0	Ø 1.9

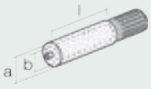

Plastic Cartridge
150mL 1:1, 2:1, 10:1 PP

		mm	inch
	l	117	4.6
	a	Ø 50.0	Ø 1.9
1:1	b	Ø 32.0	Ø 1.2
2:1	b	Ø 26.0	Ø 1.0
10:1	b	Ø 14.3	Ø 0.5

Conversion kits

-

Matching accessories

Nozzle extension / Twisty nozzle on pages 98-102.

PowerFlow™ HP Combi

310-600mL Cartridge & Sachet

Model shown: PowerFlow HP Combi 600mL

Features

- High quality epoxy coated cast aluminum handle
- Easily converted for cartridges and sachets
- Switchable Pressure Relief Device (PRD)

Benefits

- For day long comfortable use
- Gives you complete flexibility
- Prevents material run-on

Applications

Bonding

Sealing

Product by range

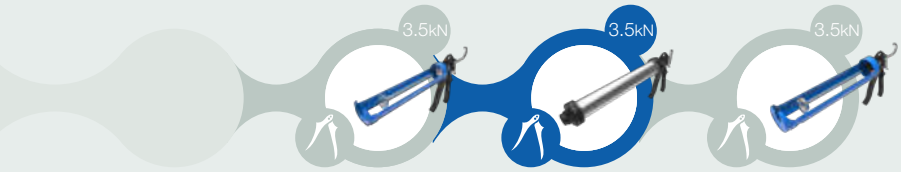

PowerFlow HP Cartridge | **PowerFlow HP Combi** | PowerFlow HP Quart

The **PowerFlow Combi HP** 1-component manual dispenser is designed for use with medium to high viscosity sealants and adhesives compatible with both cartridges and sachets for complete flexibility.

Specifications

- Weight: 0.9-1.1kg / 2.0-2.3lbs
- Barrel Length: 274mm-382mm / 10.8in-15.0in
- Maximum Thrust: 3.5kN
- Handle Material: Epoxy Coated Aluminum
- Barrel Material: Anodized Aluminum / Clear Plastic
- Tool Component Approvals: REACH
- Cartridge Capacity: 310mL (10.5oz), 400mL (13.5oz)
- Sachet Capacity: 310mL (10.5oz), 400mL (13.5oz), 600mL (20.3oz)
- Mechanical Advantage Ratio: (18:1)
- Standard Color: Black/Grey
- Nozzle Dimension: ø38mm / 1.5in
- Customized versions on demand

Dimensions (mm/in)

product	height (h)	length (l)	depth (d)	barrel (b)
Combi 300 HP	213 /8.4	376 /14.8	69 /2.7	274 /10.8
Combi 400 HP	213 /8.4	376 /14.8	69 /2.7	274 /10.8
Combi 600 HP	213 /8.4	493 /19.4	69 /2.7	382 /15.0

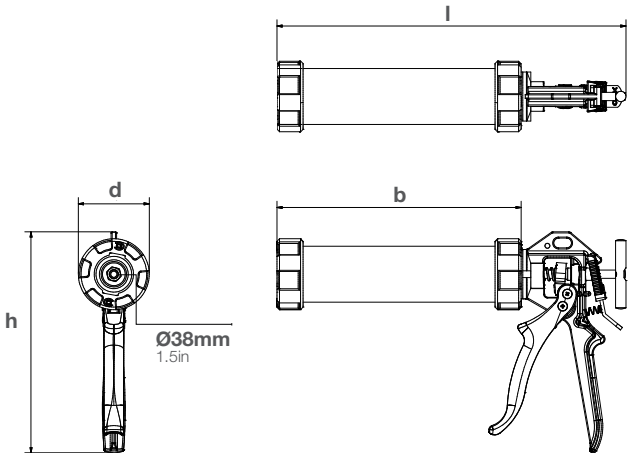

Product:	Article number:	Packaging:
	Anodized Aluminium Barrel	
DM1C 310-cm-r18-001	177319 (51000-XT for US)	10 per Box (1 per Box for US)
DM1C 400-cm-r18-001	177327 (51000-400XT for US)	10 per Box (1 per Box for US)
DM1C 600-cm-r18-001	177351 (51001-XT for US)	10 per Box (1 per Box for US)

Matching MIXPAC™ cartridges

Peeler Cartridge
310 mL

Compatible cartridges and sachets

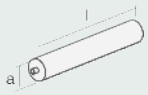

Plastic Cartridge
310mL HPDE/PP/PA

	mm	inch
l	216.0	8.5
a	Ø48.2	Ø 1.8

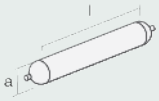

Sachet
310mL

	mm	inch
l	220.0	8.66
a	Ø 50.0	Ø 1.97

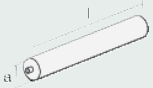

Plastic Cartridge
400mL HPDE/PA

	mm	inch
l	256.0	10.1
a	Ø 49.0	Ø 1.9

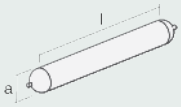

Sachet
400mL

	mm	inch
l	258.0	10.16
a	Ø 50.0	Ø 1.97

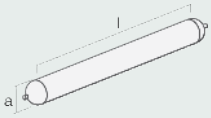

Sachet
600mL

	mm	inch
l	335.0	13.2
a	Ø 50.0	Ø 2.0

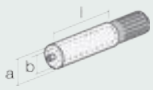

Plastic Cartridge
150mL 1:1, 2:1, 10:1 PP

		mm	inch
	l	117	4.6
	a	Ø 50.0	Ø 1.9
1:1	b	Ø 32.0	Ø 1.2
2:1	b	Ø 26.0	Ø 1.0
10:1	b	Ø 14.3	Ø 0.5

Conversion kits

-

Matching accessories

Nozzle extension / White Cone / Yellow Cone / Twisty nozzle on page 98-102.

PowerFlow™ HP Quart

946mL Cartridge Dispenser

Model shown: PowerFlow HP Quart Cartridge 946mL

Features

- High quality epoxy coated cast aluminum handle
- Epoxy coated steel cradle supports cartridge
- Curved rod end
- Switchable Pressure Relief Device (PRD)
- Spike (US only)

Benefits

- Gives you day-long comfortable use
- For convenient tool support and storage
- Creates convenient tool support and storage
- Prevents material run-on
- For piercing barrier in cartridges

Applications

Bonding

Sealing

Product by range

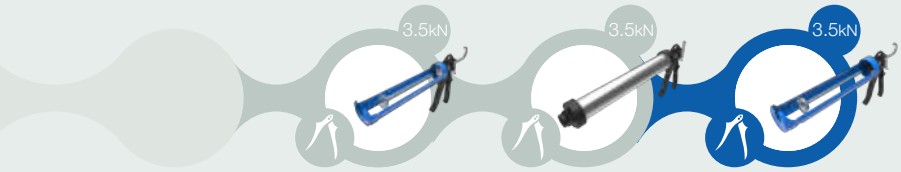

PowerFlow HP Cartridge | PowerFlow HP Combi | **PowerFlow HP Quart**

The **PowerFlow HP Quart** 1-component manual dispenser is designed for use with low to high viscosity sealants and adhesives while the switchable Pressure Relief Device (PRD) prevents run-on.

Specifications

- Weight: 1.47kg / 2.5lbs
- Frame Length: 354mm / 13.94in
- Maximum Thrust: 3.5kN
- Pressure Relief Device (PRD)
- Handle Material: Epoxy Coated Aluminum
- Frame Material: Epoxy Coated Steel
- Tool Component Approvals: REACH
- Cartridge Capacity: 946mL (32oz)
- Mechanical Advantage Ratio: (18:1)
- Standard Color: Blue/Black
- Nozzle Dimension: ø26mm / 1.02in
- Customized versions on demand

Dimensions

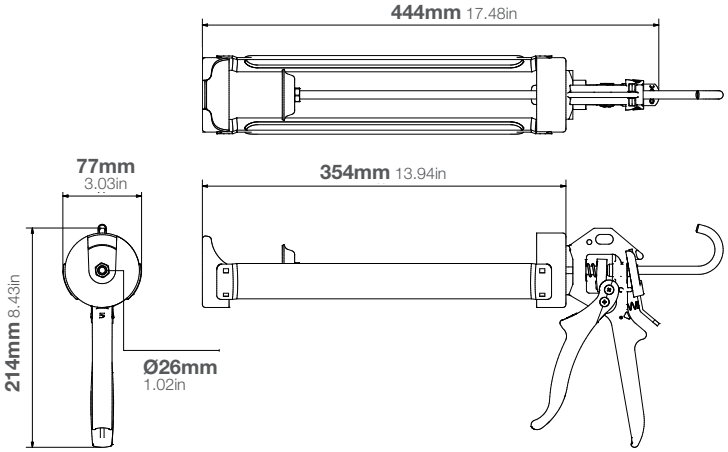

Product:
HP Quart Cartridge

Article number:
41002-XT (US)

Packaging:
3 per Box

Matching MIXPAC™ cartridges

-

Compatible cartridges

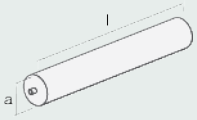

Plastic Cartridge-Quart
946mL

	mm	inch
l	320	12.6
a	Ø 67.0	Ø 2.6

Conversion kits

-

Matching accessories

Nozzle extension / Twisty nozzle on pages 98-102.

UltraFlow™ Cartridge

310mL Cartridge Dispenser

Model shown: UltraFlow Cartridge 310mL

Features

- Epoxy coated aluminum handle
- Anodized steel rotating frame
- Built in cartridge support straps
- Curved rod end
- Hardened and metal plated parts

Benefits

- Designed to accommodate high load requirements with ease
- Helps securely position and retain the cartridge
- Creates convenient tool support and storage
- Increases corrosion resistance

Applications

Bonding

Sealing

Product by range

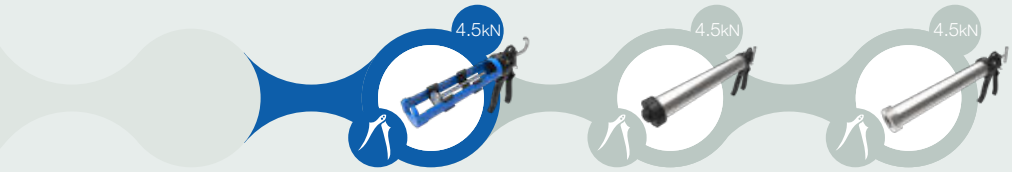

UltraFlow Cartridge | UltraFlow Combi | UltraFlow Bulk

The **UltraFlow** 1-component manual is a highpowered reliable dispenser with rotating u-opening anodized steel frame that copes easily with high forces.

Specifications

- Weight: 0.90kg / 1.34lbs
- Frame Length: 243mm / 9.57in
- Maximum Thrust: 4.5kN
- Handle Material: Epoxy Coated Aluminum
- Frame Material: Anodized Steel
- Tool Component Approvals: REACH
- Cartridge Capacity: 310mL (10.5oz)
- Mechanical Advantage Ratio: (25:1)
- Standard Color: Blue/Black
- Nozzle Dimension: ø26mm / 1.02in
- Customized versions on demand

Dimensions

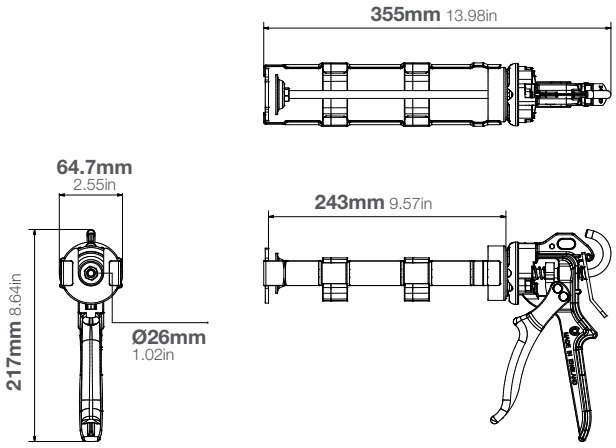

Product:
DM1C 310-ca-r25-001

Article number:
163534 (41004-2T for US)

Packaging:
10 per Box (6 per Box for US)

Matching MIXPAC™ cartridges

Peeler Cartridge
310 mL

Compatible cartridges

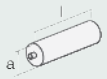

Plastic Cartridge
150mL HPDE/PA

	mm	inch
l	124.5	4.9
a	Ø 48.7	Ø 1.9

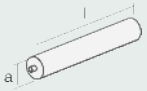

Plastic Cartridge
310mL HPDE/PP/PA

	mm	inch
l	216.0	8.5
a	Ø48.2	Ø 1.8

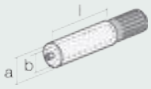

Plastic Cartridge
150mL 1:1, 2:1, 10:1 PP

		mm	inch
	l	117	4.6
	a	Ø 50.0	Ø 1.9
1:1	b	Ø 32.0	Ø 1.2
2:1	b	Ø 26.0	Ø 1.0
10:1	b	Ø 14.3	Ø 0.5

Conversion kits

-

Matching accessories

Nozzle extension / twisty nozzle on pages 98-102.

UltraFlow™ Combi

310-600mL Cartridge & Sachet Dispenser

Model shown: UltraFlow Combi 600mL

Features

- Epoxy coated aluminum handle
- Large sintered metal catch plate
- Anodized aluminum barrel
- T rod end
- Metal wear compensation sleeve

Benefits

- Powerful 25:1 trigger ratio for easy application
- Offers high load resistance
- Copes easily with high forces
- Better grip when retracting plunger
- Protects catch plate contact area increasing tool life

Applications

Bonding

Sealing

Product by range

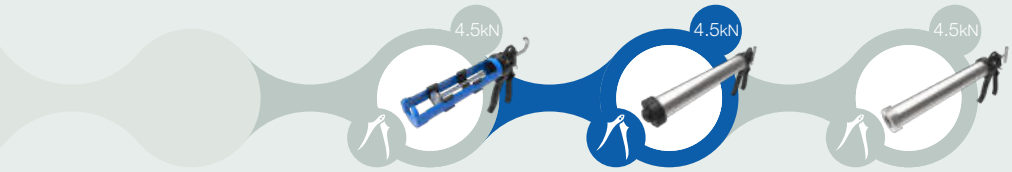

The **UltraFlow Combi** 1-component manual dispenser is designed for use with medium to high viscosity sealants and adhesives compatible with both cartridges and sachets for complete flexibility.

Specifications

- Weight: 1.0-1.1kg / 2.2-2.5lbs
- Barrel Length: 342mm-482mm / 13.5in-19.0in
- Maximum Thrust: 4.5kN
- Handle Material: Epoxy Coated Aluminum
- Barrel Material: Anodized Aluminum
- Tool Component Approvals: REACH
- Cartridge Capacity: 310mL (10.5oz), 400mL (13.5oz)
- Sachet Capacity: 310mL (10.5oz), 400mL (13.5oz), 600mL (20.3oz)
- Mechanical Advantage Ratio: (25:1)
- Standard Color: Black/Grey
- Nozzle Dimension: ø38mm / 1.5in
- Customized versions on demand

Dimensions (mm/in)

product	height (h)	length (l)	depth (d)	barrel (b)
Combi 310	213 /8.4	342 /13.5	69 /2.7	235 /9.3
Combi 400	213 /8.4	389 /15.3	69 /2.7	285 /11.2
Combi 600	213 /8.4	482 /19.0	69 /2.7	376 /14.8

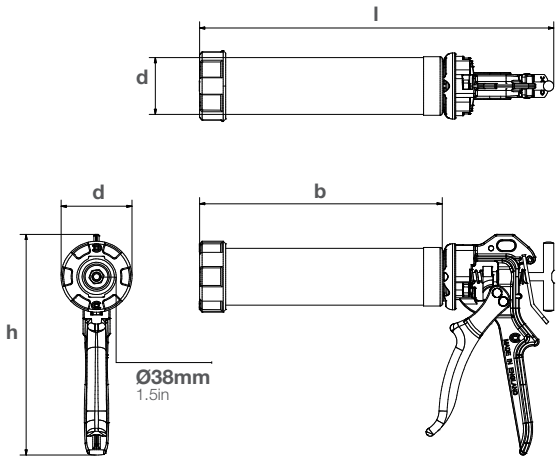

Product:	Article number:	Packaging:
DM1C 310-cm-r25-001	167248 (51000-2T for US)	10 per Box (1 per Box for US)
DM1C 400-cm-r25-001	178135	10 per Box
DM1C 600-cm-r25-001	178141 (51001-2T for US)	10 per Box (1 per Box for US)

Matching MIXPAC™ cartridges

Peeler Cartridge
310 mL

Compatible cartridges and sachets

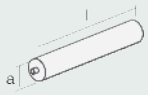

Plastic Cartridge
310mL HPDE/PP/PA

	mm	inch
l	216.0	8.5
a	Ø48.2	Ø 1.8

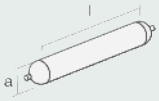

Sachet
310mL

	mm	inch
l	220.0	8.66
a	Ø 50.0	Ø 1.97

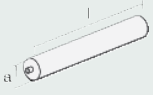

Plastic Cartridge
400mL HPDE/PA

	mm	inch
l	256.0	10.1
a	Ø 49.0	Ø 1.9

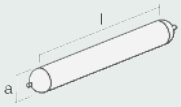

Sachet
400mL

	mm	inch
l	258.0	10.16
a	Ø 50.0	Ø 1.97

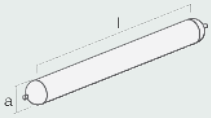

Sachet
600mL

	mm	inch
l	335.0	13.2
a	Ø 50.0	Ø 2.0

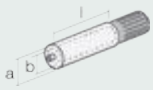

Plastic Cartridge
150mL 1:1, 2:1, 10:1 PP

		mm	inch
	l	117	4.6
	a	Ø 50.0	Ø 1.9
1:1	b	Ø 32.0	Ø 1.2
2:1	b	Ø 26.0	Ø 1.0
10:1	b	Ø 14.3	Ø 0.5

Conversion kits

-

Matching accessories

White Cone / Yellow Cone on page 98-102.

UltraFlow™ Bulk

600/1000mL Dispenser

Model shown: UltraFlow Bulk 600mL

Features

- Ergonomically formed epoxy coated aluminum handle
- Large sintered metal catch plate
- Metal wear compensation sleeve
- Comes with leather plunger

Benefits

- Powerful 25:1 trigger ratio for easy application
- Offers high load resistance
- Protects the catch plate contact area increasing tool life
- Chemical and solvent resistant

Applications

Bonding

Sealing

Product by range

UltraFlow Cartridge | UltraFlow Combi | **UltraFlow Bulk**

The **UltraFlow Bulk** 1-component manual dispenser with anodized alumium barrel that copes easily with high forces. The leather plunger assembly is both chemical and solvent resistant.

Specifications

- Weight: 1.1-1.3kg / 2.4-2.9lbs
- Barrel Length: 380mm-537mm / 15in-21.1in
- Maximum Thrust: 4.5kN
- Handle Material: Epoxy Coated Aluminum
- Barrel Material: Anodized Aluminum
- Tool Component Approvals: REACH
- Bulk Material Capacity: 600mL (20.3oz), 1000mL (33.8oz)
- Mechanical Advantage Ratio: (25:1)
- Standard Color: Black/Grey
- Nozzle Dimension: ø38mm / 1.5in
- Customized versions on demand

Dimensions (mm/in)

product	height (h)	length (l)	depth (d)	barrel (b)
Bulk 600	213 /8.4	490 /19.3	69 /2.7	380 /9.3
Bulk 1000	213 /8.4	650 /25.6	69 /2.7	537 /21.1

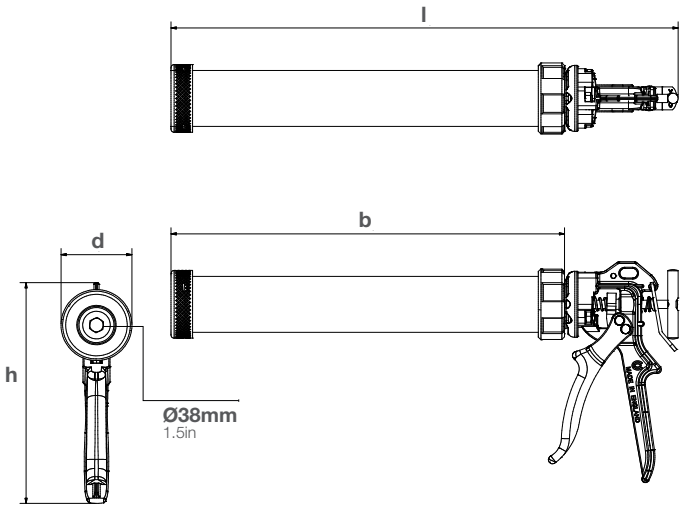

Product:	Article number:	Packaging:
DM1C 600-bu-r25-001	178286 (51002-600 for US)	1 per Box
DM1C 1000-bu-r25-001	178291 (51002-1000 for US)	1 per Box

Matching MIXPAC™ cartridges

-

Compatible cartridges

Bulk
400-4000mL

Conversion kits

-

Matching accessories

Ladder Hook Kit / White Cone / Yellow Cone
on pages 98-102.

Ultrapoint™ Bulk

800mL Dispenser

Model shown: Ultrapoint 800mL

Features

- High thrust trigger mechanism with contoured grips
- Choice of nozzles for pointing or grouting
- Epoxy coated steel frame
- Rubber plunger
- Switchable Pressure Relief Device (PRD)

Benefits

- Provides easier dispensing
- Easy to use and simple maintenance
- For strength, durability and corrosion resistance
- Allows for wear take-up and optimum barrel fit
- Prevents material run-on (US only)

Applications

Bonding

Sealing

Gap Filling

Product by range

Ultrapoint™ Bulk

Ultrapoint™ HP Bulk

The **Ultrapoint** 1-component manual dispenser is designed with high thrust trigger mechanism for easy dispensing with a choice of nozzles for pointing and grouting.

Specifications

- Weight 1.42kg / 3.13lbs
- Barrel Length: 300mm / 11.81in
- Maximum Thrust: 2.5kN
- Handle Material: Epoxy Coated Aluminum
- Barrel Material: Black PVC
- Tool Component Approvals: REACH
- Bulk Material Capacity: 800mL (28oz)
- Mechanical Advantage Ratio: (12:1)
- Standard Color: Blue/Black
- Customized versions on demand

Dimensions

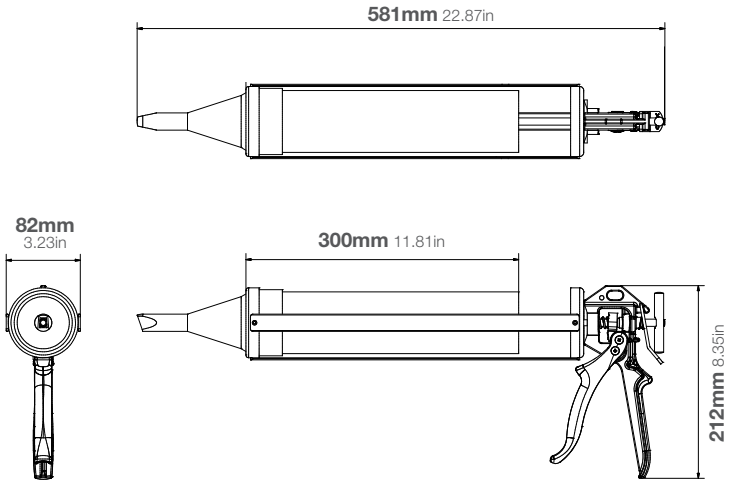

Product:
DM1C 800-bu-r12-001

Article number:
159215 (41006 for US)

Packaging:
1 per Box

Matching MIXPAC™ cartridges

-

Compatible other

Bulk
400-4000mL

Conversion kits

-

Matching accessories

Grouting/pointing nozzle, dispenser tube, turbine mixer
on pages 98-102.

Ultrapoint™ HP Bulk

800mL Dispenser

Model shown: Ultrapoint 800mL

Features

- High thrust trigger mechanism with contoured grips
- Choice of nozzles for pointing or grouting
- Epoxy coated steel frame
- Rubber plunger
- Switchable Pressure Relief Device (PRD)

Benefits

- Provides easier dispensing
- Easy to use and simple maintenance
- For strength, durability and corrosion resistance
- Allows for wear take-up and optimum barrel fit
- Prevents material run-on (US only)

Applications

Bonding

Sealing

Gap Filling

Product by range

Ultrapoint™ Bulk

Ultrapoint™ HP Bulk

The **Ultrapoint** 1-component bulk dispenser is designed for use with medium to high viscosity sealants and adhesives while the rubber plunger allows wear take-up and optimum barrel fit.

Specifications

- Weight 1.42kg / 3.13lbs
- Barrel Length: 300mm / 11.81in
- Maximum Thrust: 3.5kN
- Handle Material: Epoxy Coated Aluminum
- Barrel Material: Black PVC
- Tool Component Approvals: REACH
- Bulk Material Capacity: 800mL (28oz)
- Mechanical Advantage Ratio: (18:1)
- Standard Color: Blue/Black
- Customized versions on demand

Dimensions

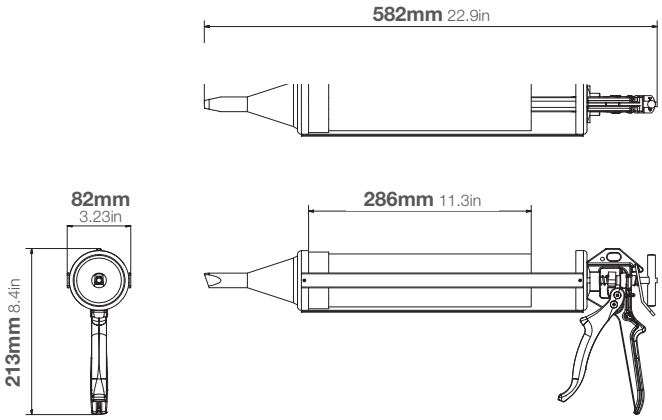

Product:
DM1C 800-bu-r18-001

Article number:
177276

Packaging:
1 per Box

Matching MIXPAC™ cartridges

-

Compatible other

Bulk
400-4000mL

Conversion kits

-

Matching accessories

Grouting/pointing nozzle, dispenser tube, turbine mixer
on pages 98-102.

EasiPower™ Plus

310mL Cartridge Dispenser

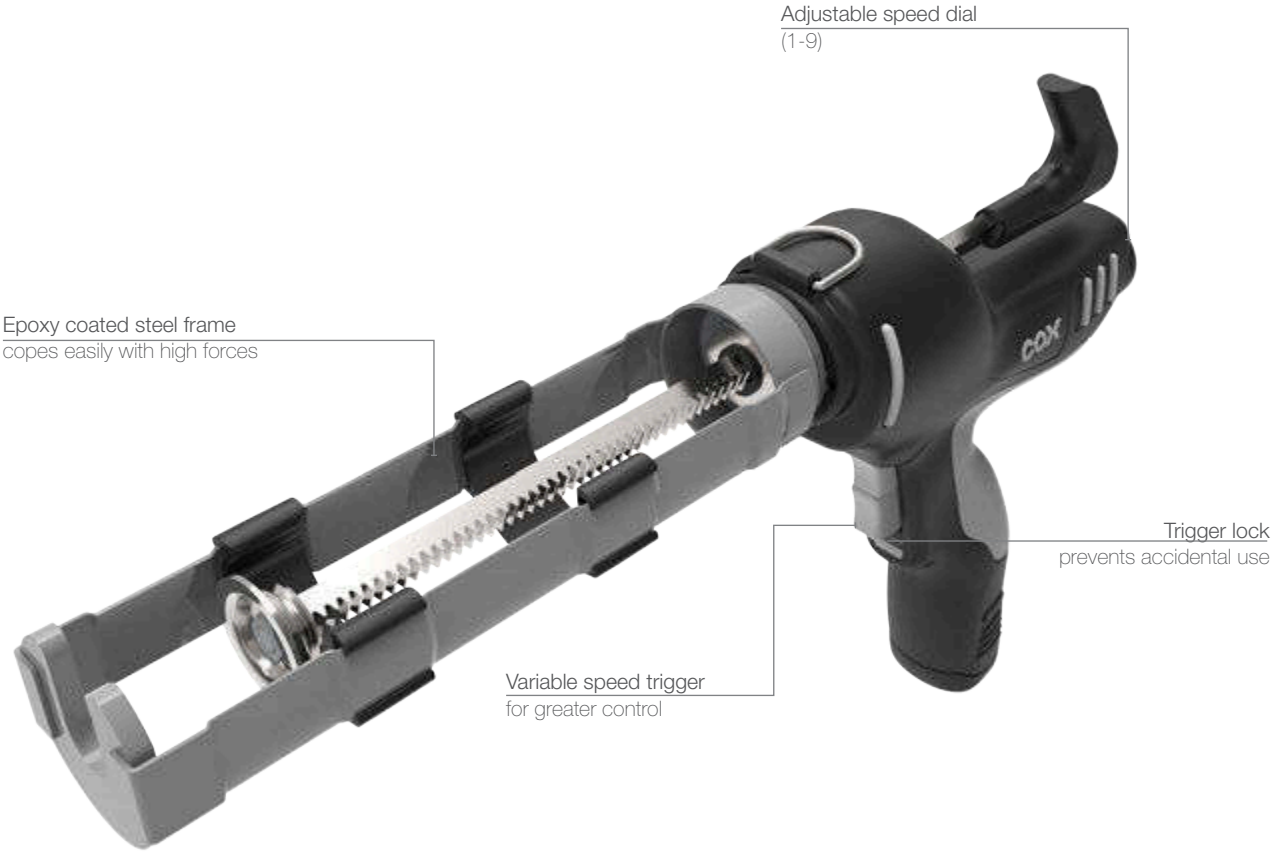

Model shown: EasiPower Plus Cartridge 310mL

Features

- Variable speed trigger
- Epoxy coated steel frame
- Rapid battery charge
- Auto-reverse function

Benefits

- For greater speed control during dispensing
- Copes easily with high forces
- 30 mins (0-100%) - no memory loss
- Stops material flow when trigger is released

Applications

Bonding

Sealing

Product by range

EasiPower Plus Cartridge | EasiPower Plus Combi | EasiPower Plus Quart

The **EasiPower** 1-component battery dispensers variable speed trigger offers greater control during dispensing while the auto reverse funtion will stop material flow when the trigger is released.

Specifications

- Weight with Battery: 1.63kg / 3.5lbs
- Frame Length: 247.8mm / 9.76in
- Maximum Thrust: 2.5kN
- Voltage: 10.8V
- Battery Capacity: 1.5Ah
- Battery Charge Time: 30 min.
- Battery Type: Li-ion
- Handle Material: PC/ABS
- Frame Material: Epoxy Coated Steel
- Tool Component Approvals: CE, REACH, RoHS
- Cartridge Capacity: 310mL (10.5oz), 400mL (13.5oz)
- Standard Color: Black/Grey
- Nozzle Dimension: ø20-31mm / 0.8-1.2in
- Customized versions on demand

Dimensions

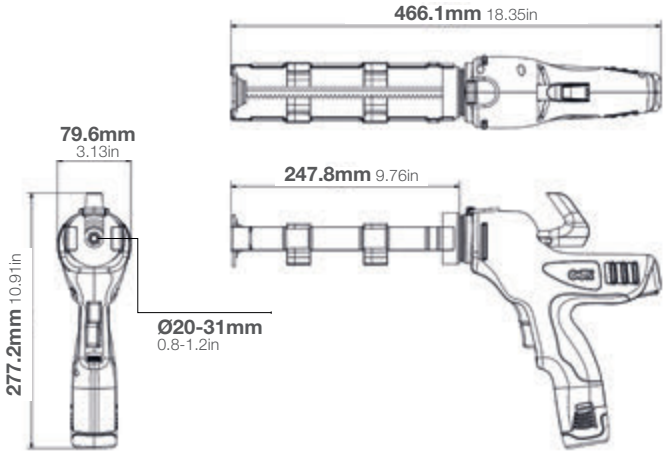

Product:	Article number:	Packaging:
DB1C 310-ca-250-101	160373 (EU)	1 per Box
DB1C 310-ca-250-1UK	181105 (UK)	
	83010-L (US)	

Matching MIXPAC™ cartridges

Peeler Cartridge
310 mL

Compatible cartridges

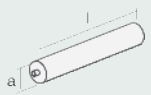

Plastic Cartridge
310mL HPDE/PP/PA

	mm	inch
l	216.0	8.5
a	Ø 48.2	Ø 1.8

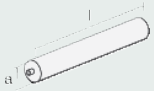

Plastic Cartridge
400mL HPDE/PA

	mm	inch
l	256.0	10.1
a	Ø 49.0	Ø 1.9

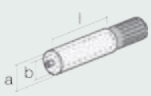

Plastic Cartridge
150mL 1:1, 2:1, 10:1 PP

		mm	inch
	l	117	4.6
	a	Ø 50.0	Ø 1.9
1:1	b	Ø 32.0	Ø 1.2
2:1	b	Ø 26.0	Ø 1.0
10:1	b	Ø 14.3	Ø 0.5

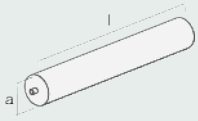

Plastic Cartridge-Quart
946mL

	mm	inch
l	320	12.6
a	Ø 67.0	Ø 2.6

Conversion kits

-

Matching accessories

Carry case / Universal battery charger / Battery
on pages 98-102.

EasiPower™ Plus Combi

400-600mL Cartridge & Sachet Dispenser

Model shown: EasiPower Plus Combi 400mL

Features

- Variable speed trigger
- Anodized aluminum frame
- Rapid battery charge
- Auto-reverse function

Benefits

- For greater speed control during dispensing
- Copes easily with high forces
- 30 mins (0-100%) – no memory loss
- Stops material flow when trigger is released

Applications

Bonding

Sealing

Product by range

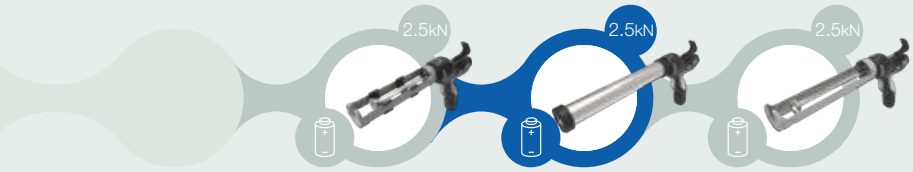

EasiPower Plus Cartridge | **EasiPower Plus Combi** | EasiPower Plus Quart

The **EasiPower Combi** 1-component battery dispenser is compatible with both cartridges and sachets for complete flexibility, the variable speed trigger offers greater control during dispensing.

Specifications

- Weight with Battery: 1.7-1.86kg / 3.64-4.1lbs
- Barrel Length: 237mm-383mm / 9.3in-15.1in
- Maximum Thrust: 2.5kN
- Voltage: 10.8V
- Battery Capacity: 1.5Ah
- Battery Charge Time: 30 min.
- Battery Type: Li-ion
- Handle Material: PC/ABS
- Barrel Material: Anodized Aluminum
- Tool Component Approvals: CE, REACH, RoHS
- Cartridge Capacity: 310mL (10.5oz), 400mL (13.5oz)
- Sachet Capacity: 310mL (10.5oz), 400mL (13.5oz) 600mL (20.3oz)
- Standard Color: Black/Grey
- Nozzle Dimension: ø38mm / 1.5in
- Customized versions on demand

Dimensions (mm/in)

product	height (h)	length (l)	depth (d)	barrel (b)
Combi 400	277 /10.9	492 /20.4	80 /3.1	275 /10.8
Combi 600	277 /10.9	600 /23.6	80 /3.1	383 /15.1

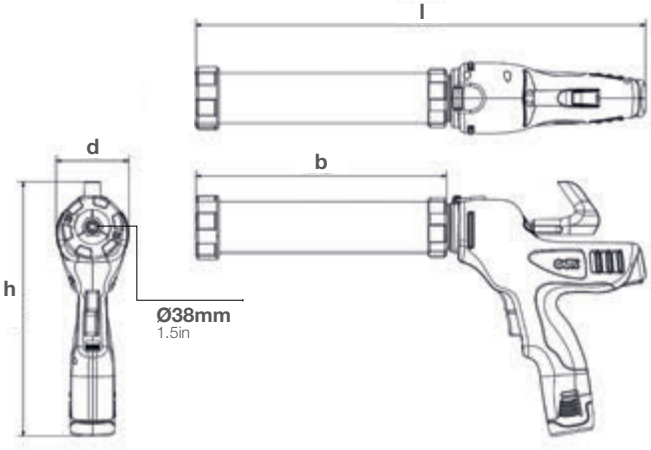

Product:	Article number:	Packaging:
DB1C 400-cm-250-101 / DB1C 400-cm-250-1UK	160375 (EU), 181110 (UK	1 per Box
DB1C 600-cm-250-101 / DB1C 600-cm-250-1UK	160376 (EU), 181115 (UK), 83600-L (US)	1 per Box

Matching MIXPAC™ cartridges

Peeler Cartridge
310 mL

Compatible cartridges and sachets

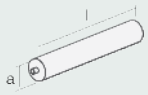

Plastic Cartridge
310mL HPDE/PP/PA

	mm	inch
l	216.0	8.5
a	Ø48.2	Ø 1.8

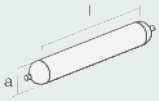

Sachet
310mL

	mm	inch
l	220.0	8.66
a	Ø 50.0	Ø 1.97

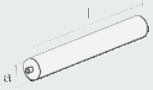

Plastic Cartridge
400mL HPDE/PA

	mm	inch
l	256.0	10.1
a	Ø 49.0	Ø 1.9

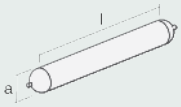

Sachet
400mL

	mm	inch
l	258.0	10.16
a	Ø 50.0	Ø 1.97

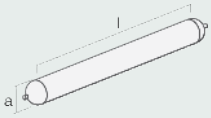

Sachet
600mL

	mm	inch
l	335.0	13.2
a	Ø 50.0	Ø 2.0

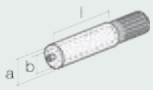

Plastic Cartridge
150mL 1:1, 2:1, 10:1 PP

		mm	inch
	l	117	4.6
	a	Ø 50.0	Ø 1.9
1:1	b	Ø 32.0	Ø 1.2
2:1	b	Ø 26.0	Ø 1.0
10:1	b	Ø 14.3	Ø 0.5

Conversion kits

-

Matching accessories

White cone / Yellow cone / Carry case / Universal battery charger / Battery on pages 98-102.

EasiPower™ Plus Quart

946mL Cartridge Dispenser

Model shown: EasiPower Plus Quarti 946mL

Features

- Variable speed trigger
- Epoxy coated steel frame
- Includes battery & charger
- Rapid battery charge
- Auto-reverse function

Benefits

- For greater speed control during dispensing
- Copes easily with high forces
- Ready to use
- 30 mins (0-100%) – no memory loss
- Stops material flow when trigger is released

Applications

Bonding

Sealing

Product by range

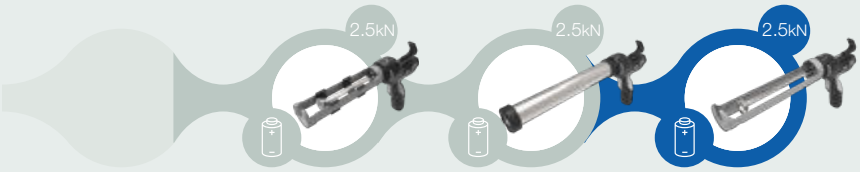

EasiPower Plus Cartridge | EasiPower Plus Combi | **EasiPower Plus Quart**

The **EasiPower Plus Quart** 1-component battery dispensers auto reverse function stops material flow when trigger is released giving you precise control and smooth material flow.

Specifications

- Weight with Battery: 1.63kg/3.5lbs
- Barrel Length: 347mm / 13.66in
- Maximum Thrust: 2.5kN
- Voltage: 10.8V
- Battery Capacity: 1.5Ah
- Battery Charge Time: 30 min.
- Battery Type: Li-ion
- Handle Material: PC/ABS
- Barrel Material: Anodized Aluminum
- Tool Component Approvals: CE, REACH, RoHS
- Cartridge Capacity: 946mL (29oz)
- Standard Color: Black/Grey
- Nozzle Dimension: ø38mm / 1.5in
- Customized versions on demand

Dimensions

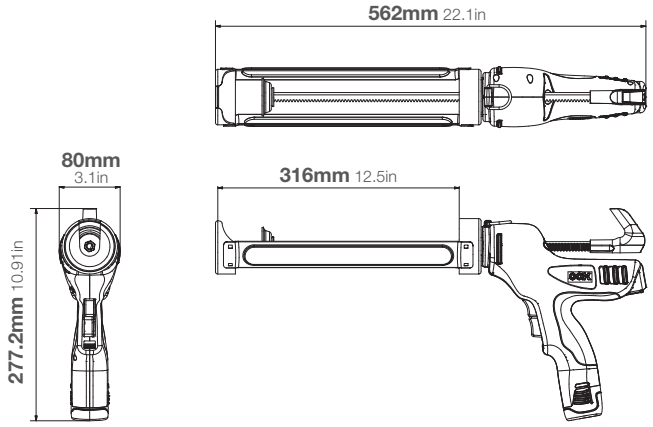

Product:

Article number:
83029-L

Packaging:

Matching MIXPAC™ cartridges

-

Compatible cartridges and sachets

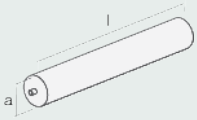

Plastic Cartridge-Quart
946mL

	mm	inch
l	320	12.6
a	Ø 67.0	Ø 2.6

Conversion kits

-

Matching accessories

White cone / Yellow cone / Carry case / Universal battery charger / Battery on pages 98-102.

ElectraFlow™ Plus

310mL Cartridge Dispenser

Model shown: ElectraFlow Plus Cartridge 310mL

Features

- Rechargeable Bosch Professional 18V System
- Variable speed trigger
- Epoxy coated steel frame
- Overload shut off function
- Auto-reverse function

Benefits

- More capacity equals longer usage between charges
- For greater speed control during dispensing
- Copes easily with high forces
- Prevents damage to the tool and cartridge
- Stops material flow when trigger is released

Applications

Bonding

Sealing

Product by range

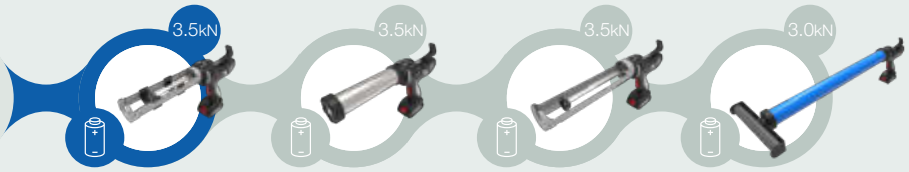

ElectraFlow Plus Cartridge | ElectraFlow Plus Combi | ElectraFlow Plus Quart | ElectraFlow Plus FloorFix

* PROFESSIONAL 18V SYSTEM is a trademark registered and/or owned by BOSCH.

The **ElectraFlow Plus** 1-component battery dispenser is designed for use with medium to high viscosity sealants and adhesives while the Bosch Professional 18V System offers more capacity giving you longer usage between charges.

Specifications

- Weight with Battery: 2.38kg / 5.2lbs
- Frame Length: 246mm / 9.69in
- Maximum Thrust: 3.5kN
- Voltage: 18V
- Battery Capacity: 2.0Ah
- Battery Charge Time: 35min
- Battery Type: Li-ion
- Handle Material: PC/ABS
- Frame Material: Epoxy Coated Steel
- Tool Component Approvals: CE, REACH, RoHS
- Cartridge Capacity: 310mL (10.5oz)
- Standard Color: Black/Grey
- Nozzle Dimension: ø26mm / 1.02in
- Customized versions on demand

Dimensions

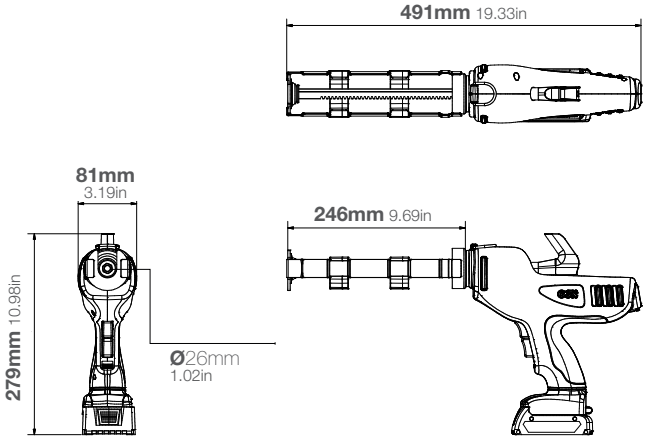

Product:
DB1C 310-ca-350-201

Article number:
167029 (bare no battery/charger)
EU/UK/US battery & chargerversions also available

Packaging:
1 per Box

Matching MIXPAC™ cartridges

Compatible cartridges

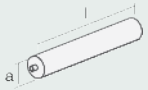

Plastic Cartridge
310mL HPDE/PP/PA

	mm	inch
l	216.0	8.5
a	Ø 48.2	Ø 1.8

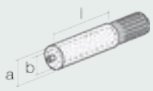

Plastic Cartridge
150mL 1:1, 2:1, 10:1 PP

		mm	inch
	l	117	4.6
	a	Ø 50.0	Ø 1.9
1:1	b	Ø 32.0	Ø 1.2
2:1	b	Ø 26.0	Ø 1.0
10:1	b	Ø 14.3	Ø 0.5

Conversion kits

-

Matching accessories

Battery charger / Battery / Carrying case
on pages 101.

ElectraFlow™ Plus Combi

310-600mL Cartridge & Sachet Dispenser

Model shown: ElectraFlow Plus Combi 310mL

Features

- Rechargeable Bosch Professional 18V System
- Variable speed trigger
- Anodized Aluminum barrel
- Rapid battery charge
- Auto-reverse function

Benefits

- More capacity equals longer usage between charges
- For greater speed control during dispensing
- Copes easily with high forces
- 30 mins (0-100%) – no memory loss
- Stops material flow when trigger is released

Applications

Bonding

Sealing

Product by range

ElectraFlow Plus Cartridge | **ElectraFlow Plus Combi** | ElectraFlow Plus Quart | ElectraFlow Plus FloorFix

* PROFESSIONAL 18V SYSTEM is a trademark registered and/or owned by BOSCH.

The **ElectraFlow Plus Combi** 1-component battery dispensers anodized aluminum steel barrel is compatible with both cartridges and sachets while the Bosch Professional 18V System offers more capacity giving you longer usage between charges.

Specifications

- Weight: 1.65-2.53kg / 3.63-5.6lbs
- Barrel Length: 237mm-389mm / 9.3in-15.3in
- Maximum Thrust: 3.5kN
- Voltage: 18V
- Battery Capacity: 2Ah
- Battery Charge Time: 35min
- Battery Type: Li-ion
- Handle Material: PC/ABS
- Barrel Material: Anodized Aluminum
- Tool Component Approvals: CE, REACH, RoHS
- Cartridge Capacity: 310mL (10.5oz), 400mL (13.5oz)
- Sachet Capacity: 310mL (10.5oz), 400mL (13.5oz), 600mL (20.3oz))
- Standard Color: Black/Grey
- Nozzle Dimension: ø38mm / 1.5in
- Customized versions on demand

Dimensions (mm/in)

product	height (h)	length (l)	depth (d)	barrel (b)
Combi 310	279 /11.0	480 /18.9	81 /3.2	237 /9.3
Combi 400	278 /10.9	518 /20.4	81 /3.2	275 /10.8
Combi 600	282 /11.1	632 /24.9	81 /3.2	389 /15.3

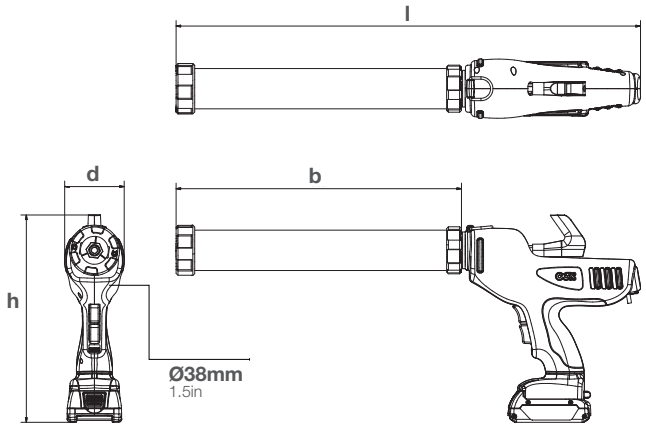

Product:	**Article number:**	**Packaging:**
DB1C 400-cm-350-201	167063 (bare no battery/charger)	1 per Box
DB1C 600-cm-350-201	167068 (bare no battery/charger)	1 per Box

EU/UK/US battery & charger versions also available

Matching MIXPAC™ cartridges

Peeler Cartridge
310 mL

Compatible cartridges and sachets

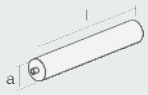

Plastic Cartridge
310mL HPDE/PP/PA

	mm	inch
l	216.0	8.5
a	Ø48.2	Ø 1.8

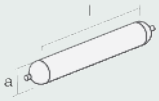

Sachet
310mL

	mm	inch
l	220.0	8.66
a	Ø 50.0	Ø 1.97

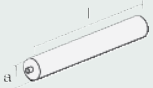

Plastic Cartridge
400mL HPDE/PA

	mm	inch
l	256.0	10.1
a	Ø 49.0	Ø 1.9

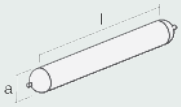

Sachet
400mL

	mm	inch
l	258.0	10.16
a	Ø 50.0	Ø 1.97

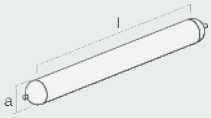

Sachet
600mL

	mm	inch
l	335.0	13.2
a	Ø 50.0	Ø 2.0

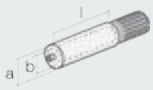

Plastic Cartridge
150mL 1:1, 2:1, 10:1 PP

		mm	inch
	l	117	4.6
	a	Ø 50.0	Ø 1.9
1:1	b	Ø 32.0	Ø 1.2
2:1	b	Ø 26.0	Ø 1.0
10:1	b	Ø 14.3	Ø 0.5

Conversion kits

-

Matching accessories

White cone / Yellow cone / Battery charger / Carrying case
Battery on pages 101.

ElectraFlow™ Plus Quart

946mL Cartridge Dispenser

Model shown: ElectraFlow Plus Quart 946mL

Features

- Rechargeable Bosch Professional 18V System
- Variable speed trigger
- Epoxy coated steel frame
- Rapid battery charge
- Auto-reverse function

Benefits

- More capacity equals longer usage between charges
- For greater speed control during dispensing
- Copes easily with high forces
- 30 mins (0-100%) – no memory loss
- Stops material flow when trigger is released

Applications

Bonding

Sealing

Product by range

ElectraFlow Plus Cartridge | ElectraFlow Plus Combi | **ElectraFlow Plus Quart** | ElectraFlow Plus FloorFix

* PROFESSIONAL 18V SYSTEM is a trademark registered and/or owned by BOSCH.

The **ElectraFlow Plus Quart** 1-component battery dispensers Bosch Professional 18V System offers more capacity giving you longer usage between charges and rapid battery recharge.

Specifications

- Weight with Battery: 2.65kg / 5.8lbs
- Frame Length: 347mm / 13.66in
- Maximum Thrust: 3.5kN
- Voltage: 18V
- Battery Capacity: 2Ah
- Battery Charge Time: 35 min
- Battery Type: Li-ion
- Handle Material: PC/ABS
- Frame Material: Epoxy Coated Steel
- Tool Component Approvals: CE, REACH, RoHS
- Cartridge Capacity: 946mL (32oz)
- Standard Color: Black/Grey
- Nozzle Dimension: ø26mm / 1.02in
- Customized versions on demand

Dimensions

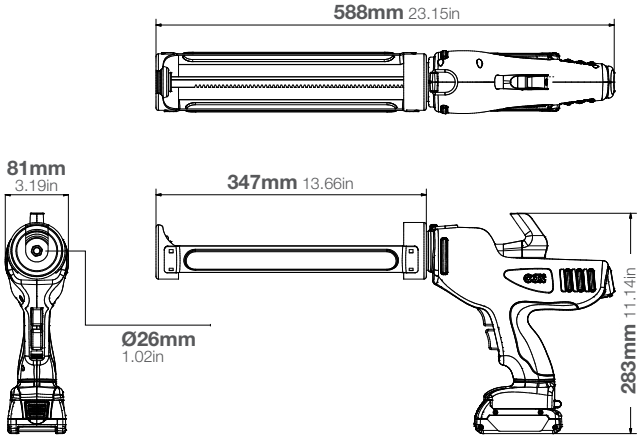

Product:
Quart 946

Article number:
83029 (US)

Packaging:
1 per box

Matching MIXPAC™ cartridges

-

Compatible cartridges

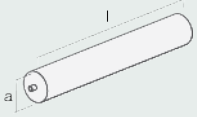

Plastic Cartridge-Quart
946mL

	mm	inch
l	320	12.6
a	Ø 67.0	Ø 2.6

Conversion kits

-

Matching accessories

Battery charger / Carrying case / Battery on pages 101.

ElectraFlow™ Plus FloorFix

1800mL Sachet Dispenser

Model shown: ElectraFlow Plus FloorFix 1800mL

Features

- Rechargeable Bosch Professional 18V System
- Speed sensitive trigger
- Auto-reverse function
- Variable spreader tubes
- No cleaning required

Benefits

- More capacity equals longer usage between charges
- Maintains an even application of materials
- Stops material flow when trigger is released
- Head widths - 190mm, 300mm and 400mm
- Disposable spreader tubes for greater productivity

Applications

Bonding

Sealing

Product by range

ElectraFlow Plus Cartridge | ElectraFlow Plus Combi | ElectraFlow Plus Quart | **ElectraFlow Plus FloorFix**

* PROFESSIONAL 18V SYSTEM is a trademark registered and/or owned by BOSCH.

The **ElectraFlow FloorFix** 1-component battery floor dispenser with bespoke barrel sizes and various spreader heads will revolutionizes how you lay flooring. While the Bosch Professional 18V System offers more capacity and rapid battery recharge.

Specifications

- Weight with Battery: 4.28kg / 9.4lbs
- Barrel Length: 814mm / 32.05in
- Maximum Thrust: 3.5kN
- Voltage: 18V
- Battery Capacity: 2Ah
- Battery Charge Time: 35 min
- Battery Type: Li-ion
- Handle Material: PC/ABS
- Barrel Material: Anodized Aluminum
- Barrel Diameter: 63mm/ 2.48in
- Tool Component Approvals: CE, REACH, RoHS
- Sachet Capacity: 1800mL (60.9oz)
- Standard Color: Blue/Black
- Customized versions on demand

Dimensions

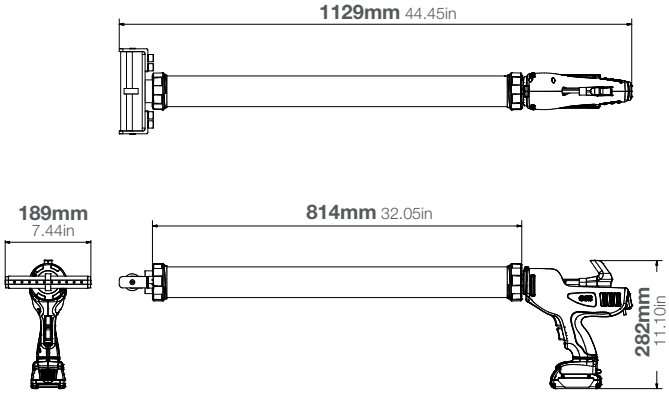

Product:
DB1C 63mm-fl-350-201

Article number:
181093 (bare no battery/charger)
EU/UK/US battery & charger versions also available

Packaging:
1 per Box

Matching MIXPAC™ cartridges

-

Compatible sachets

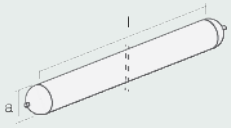

Sachet
1800mL

	mm	inch
a	880.0	34.65
b	Ø 63.0	Ø 2.48

Conversion kits

-

Matching accessories

Battery charger / Battery / Spreader tubes / Spreader heads/ Brackets can be found on pages 101.

AirFlow™ 1 Cartridge

310mL Cartridge Dispenser

Regulators

- **Standard: 6.8bar (100psi)**
- Options available:
  3.4bar (50psi)
  5.2bar (75psi)
  8.5bar (125psi)

Model shown: AirFlow 1 Cartridge 310mL

Features

- Epoxy coated aluminum handle
- Variable speed regulator
- 6.8bar (100psi) regulator
- Direct acting mechanisim
- Lightweight and compact

Benefits

- Ergonomically designed for comfort
- Minimizes flow-on
- Fitted as standard - others are available
- For precise control, smooth material flow
- Minimizes waste of material

Applications

Bonding

Sealing

Product by range

AirFlow 1 Cartridge | AirFlow 1 Sachet | AirFlow 1 Combi | AirFlow 1 Bulk | AirFlow 1 HP Combi

The **AirFlow 1 Cartridge** 1-component pnuematic dispenser is lightweight and compact, the variable speed regulator minimizes flow-on giving you precise control and smooth material flow for all your applications.

Specifications

- Weight: 0.62kg / 1.4lbs
- Barrel Length: 250mm / 9.84in
- Maximum Thrust: 1.3kN
- Maximum Pneumatic Pressure: 6.8bar (100psi)
- Handle Material: Epoxy Coated Aluminum
- Barrel Material: Anodized Aluminum
- Tool Component Approvals: CE, REACH
- Cartridge Capacity: 310mL (10.5oz)
- Standard Color: Black/Grey
- Nozzle Dimension: ø38mm / 1.5in
- Customized versions on demand

Dimensions

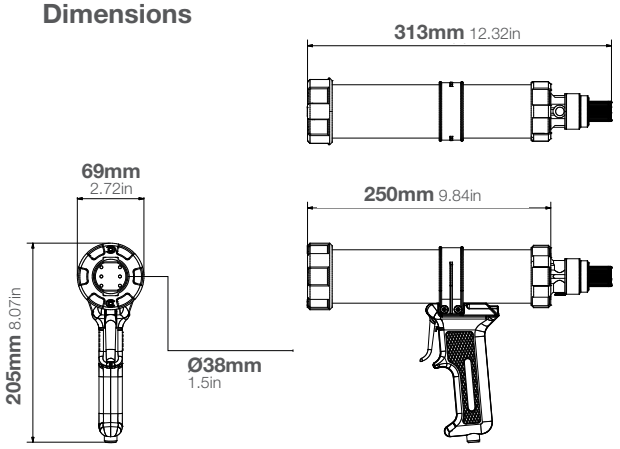

Product:
DP1C 310-ca-130-001

Article number:
177529

Packaging:
10 per Box

Matching MIXPAC™ cartridges

-

Compatible cartridges

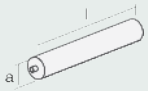

Plastic Cartridge
310mL HPDE/PP/PA

	mm	inch
l	216.0	8.5
a	Ø48.2	Ø 1.8

Conversion kits

-

Matching accessories

Nozzles - can on pages 98-102.

AirFlow™ 1 Sachet

310-600mL Sachet Dispenser

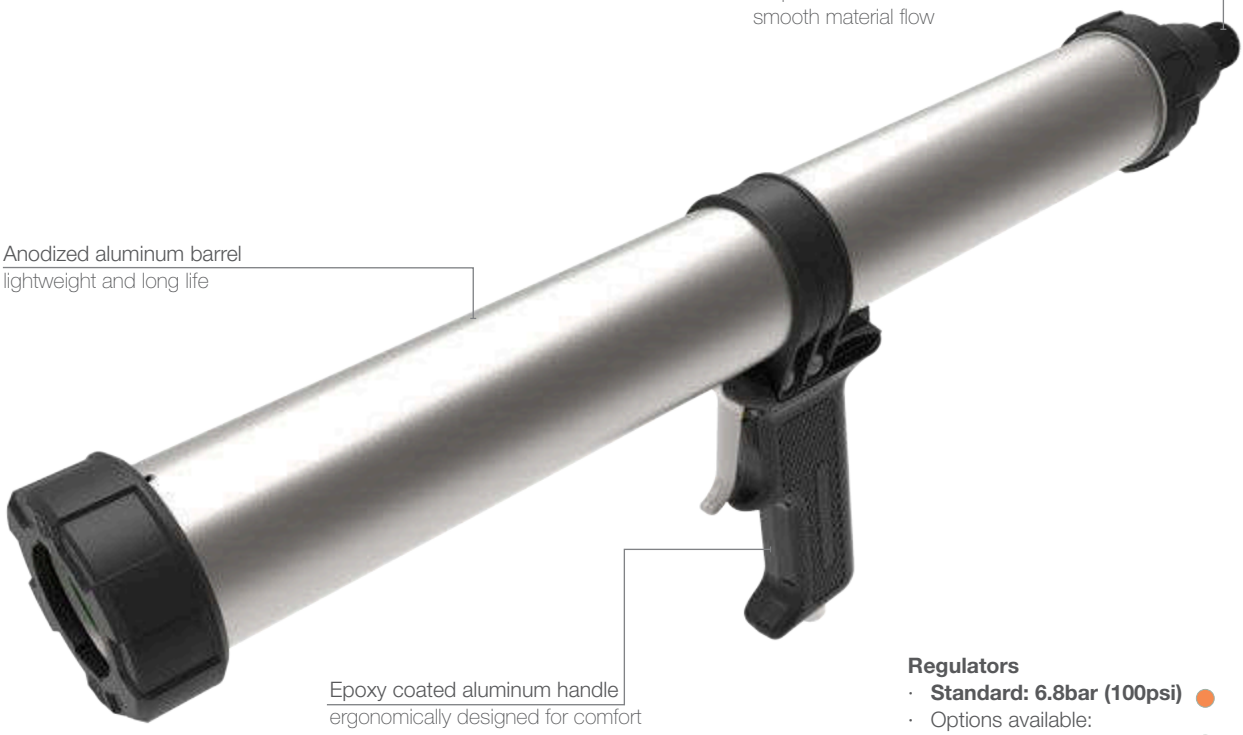

Regulators

- **Standard: 6.8bar (100psi)**
- Options available:
  - 3.4bar (50psi)
  - 5.2bar (75psi)
  - 8.5bar (125psi)

Model shown: AirFlow 1 Sachet 400mL

Features

- Epoxy coated aluminum handle
- Quick exhaust valve
- Variable speed regulator
- 6.8bar (100psi) regulator
- Floating plunger, tethered piston system

Benefits

- Ergonomically designed for comfort
- Minimizes flow-on
- For precise control, smooth material flow
- Fitted as standard - others are available
- Minimizes waste of material

Applications

Bonding

Sealing

Product by range

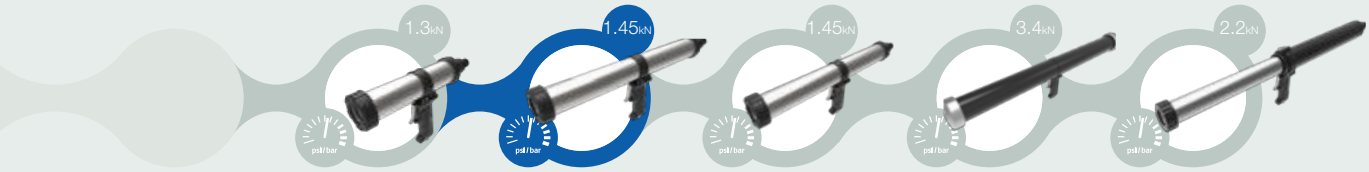

AirFlow 1 Cartridge | **AirFlow 1 Sachet** | AirFlow 1 Combi | AirFlow 1 Bulk | AirFlow 1 HP Combi

The **AirFlow 1 Sachet** 1-component pnuematic dispenser is designed for use with low viscosity sealants and adhesives. With a 6.8bar (100psi) regulator fitted as standard.

Specifications

- Weight: 0.95-1.13kg / 2.0-2.5lbs
- Frame Length: 295mm-439mm / 11.6in-17.3in
- Maximum Thrust: 1.45kN
- Maximum Pneumatic Pressure: 6.8bar (100psi)
- Handle Material: Epoxy Coated Aluminum
- Barrel Material: Anodized Aluminum
- Tool Component Approvals: CE, REACH
- Sachet Capacity: 310mL (10.5oz), 400mL (13.5oz), 600mL (20.3oz)
- Standard Color: Black/Grey
- Nozzle Dimension: ø38mm / 1.5in
- Customized versions on demand

Dimensions (mm/in)

product	height (h)	length (l)	depth (d)	barrel (b)
Sachet 310	205 /8.1	377 /14.8	69 /2.7	295 /11.6
Sachet 400	205 /8.1	409 /16.1	69 /2.7	327 /12.9
Sachet 600	205 /8.1	522 /20.6	69 /2.7	439 /17.3

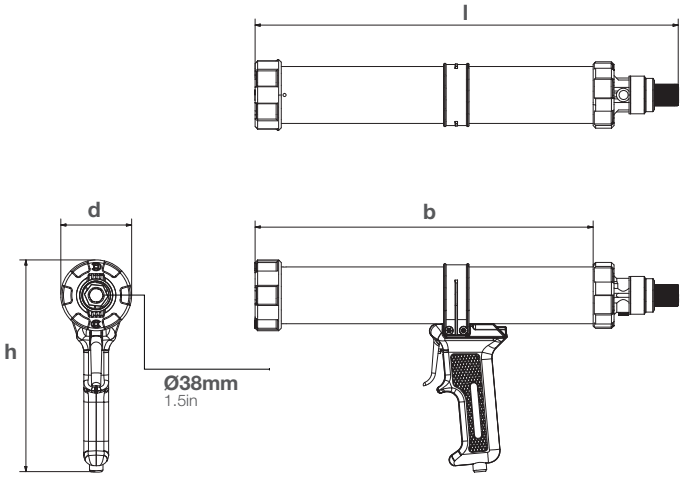

Product:	Article number:	Packaging:
DP1C 310-sa-145-101	177551	10 per Box
DP1C 400-sa-145-101	177555	10 per Box
DP1C 600-sa-145-101	177559 (61006-600 for US)	10 per Box

Matching MIXPAC™ cartridges

-

Compatible sachets

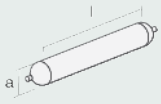

Sachet
310mL

	mm	inch
l	220.0	8.66
a	Ø 50.0	Ø 1.97

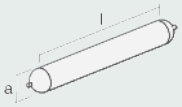

Sachet
400mL

	mm	inch
l	258.0	10.16
a	Ø 50.0	Ø 1.97

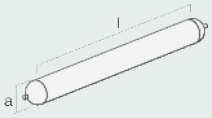

Sachet
600mL

	mm	inch
l	335.0	13.2
a	Ø 50.0	Ø 2.0

Conversion kits

-

Matching accessories

Nozzles - on pages 98-102.

AirFlow™ 1 Combi

310-600mL Cartridge & Sachet Dispenser

Regulators

- **Standard: 6.8bar (100psi)**
- Options available:
  - 3.4bar (50psi)
  - 5.2bar (75psi)
  - 8.5bar (125psi)

Model shown: AirFlow 1 Combi 310mL

Features

- Epoxy coated aluminum handle
- Variable speed regulator
- Anodized aluminum barrel
- 6.8bar (100psi) regulator
- Piston driven rod action

Benefits

- Ergonomically designed for comfort
- For precise control, smooth material flow
- Lightweight and long life
- Fitted as standard - others are available
- Greater control of material flow

Applications

Bonding

Sealing

Product by range

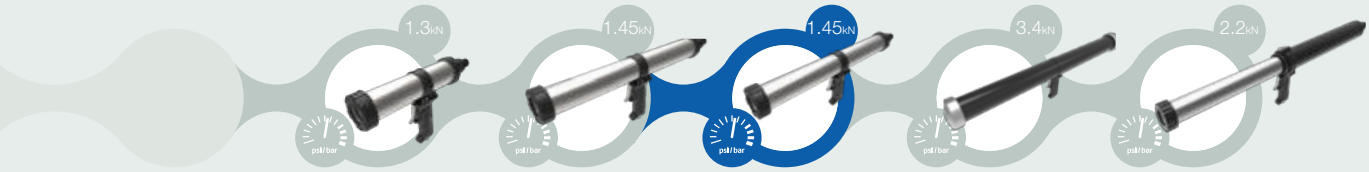

AirFlow 1 Cartridge | AirFlow 1 Sachet | **AirFlow 1 Combi** | AirFlow 1 Bulk | AirFlow 1 HP Combi

The **AirFlow 1 Combi** 1-component pnuematic dispensers lightweight anodized aluminum barrel dispenses both cartridge and sachets for complete felxibility.

Specifications

- Weight: 1.3-1.5kg / 2.8-3.3lbs
- Barrel Length: 236mm-388mm / 9.3in-15.3in
- Maximum Thrust: 1.45kN
- Maximum Pneumatic Pressure: 6.8bar (100psi)
- Handle Material: Epoxy Coated Aluminum
- Barrel Material: Anodized Aluminum
- Tool Component Approvals: CE, REACH
- Cartridge Capacity: 310mL (10.5oz), 400mL (13.5oz)
- Sachet Capacity: 310mL (10.5oz), 400mL (13.5oz), 600mL (20.3oz)
- Standard Color: Black/Grey
- Nozzle Dimension: ø38mm / 1.5in
- Customized versions on demand

Dimensions (mm/in)

product	height (h)	length (l)	depth (d)	barrel (b)
Combi 310	205 /8.1	584 /23.0	69 /2.7	236 /9.3
Combi 600	205 /8.1	882 /34.7	69 /2.7	388 /15.3

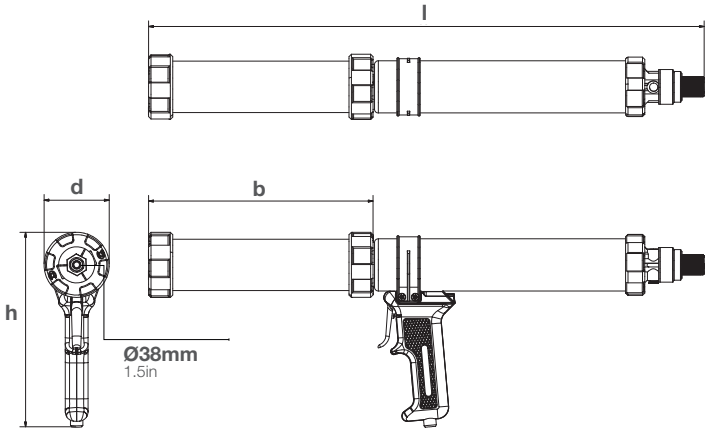

Product:	Article number:	Packaging:
DP1C 310-cm-145-101	178083	10 per Box
DP1C 600-cm-145-101	178088	1 per Box

Matching MIXPAC™ cartridges

Peeler Cartridge
310 mL

Compatible cartridges and sachets

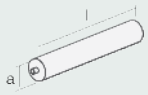

Plastic Cartridge
310mL HPDE/PP/PA

	mm	inch
l	216.0	8.5
a	Ø48.2	Ø 1.8

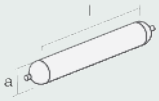

Sachet
310mL

	mm	inch
l	220.0	8.66
a	Ø 50.0	Ø 1.97

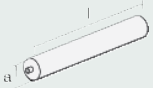

Plastic Cartridge
400mL HPDE/PA

	mm	inch
l	256.0	10.1
a	Ø 49.0	Ø 1.9

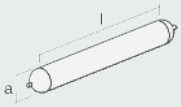

Sachet
400mL

	mm	inch
l	258.0	10.16
a	Ø 50.0	Ø 1.97

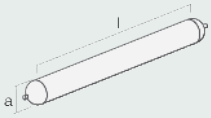

Sachet
600mL

	mm	inch
l	335.0	13.2
a	Ø 50.0	Ø 2.0

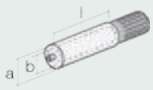

Plastic Cartridge
150mL 1:1, 2:1, 10:1 PP

		mm	inch
	l	117	4.6
	a	Ø 50.0	Ø 1.9
1:1	b	Ø 32.0	Ø 1.2
2:1	b	Ø 26.0	Ø 1.0
10:1	b	Ø 14.3	Ø 0.5

Conversion kits

-

Matching accessories

Nozzles - on pages 98-102.

AirFlow™ 1 Bulk

2000/3000/4000mL Dispenser

Regulators

- **Standard: 6.8bar (100psi)**
- Options available:
  - 3.4bar (50psi)
  - 5.2bar (75psi)
  - 8.5bar (125psi)

Model shown: AirFlow 1 Bulk 4000mL

Features

- Epoxy coated aluminum handle
- Variable speed regulator
- 6.8bar (100psi) regulator
- Steel barrel
- Tethered piston and plunger

Benefits

- Ergonomically designed for comfort
- For precise control, smooth material flow
- Fitted as standard - others are available
- For durable long life dispensing
- Greater control of material flow

Applications

Bonding

Sealing

Product by range

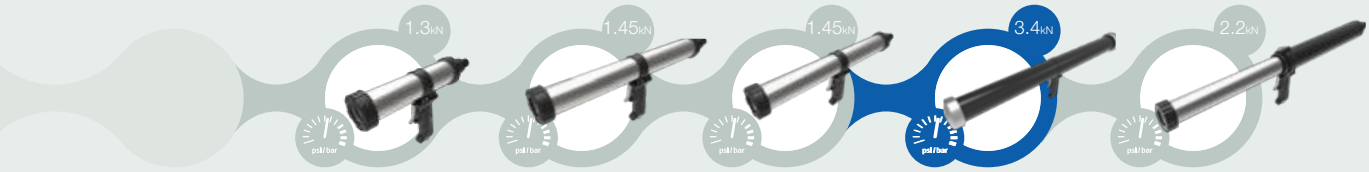

AirFlow 1 Cartridge | AirFlow 1 Sachet | AirFlow 1 Combi | **AirFlow 1 Bulk** | AirFlow 1 HP Combi

The **AirFlow 1 Bulk** 1-component pnuematic dispensers durable steel barrel dispenses 2000mL to 4000mL bulk materials with a variable speed regulator which minimizes flow-on.

Specifications

- Weight: 1.3-1.5kg / 2.8-3.3lbs
- Barrel Length: 491mm-900mm / 19.3in-35.4in
- Maximum Thrust: 3.4kN
- Maximum Pneumatic Pressure: 6.8bar (100psi)
- Handle Material: Epoxy Coated Aluminum
- Barrel Material: Steel
- Tool Component Approvals: CE, REACH
- Bulk Material Feed: 2000mL (67.2oz), 3000mL (101.4oz), 4000mL (135.3oz)
- Standard Color: Black/Grey
- Customized versions on demand

Dimensions (mm/in)

product	height (h)	length (l)	depth (d)	barrel (b)
2000mL Short	234 /9.2	625 /24.6	99 /3.9	491 /19.3
3000mL Short	234 /9.2	882 /34.7	99 /3.9	748 /29.4
4000mL Short	234 /9.2	1035 /40.7	99 /3.9	900 /35.4

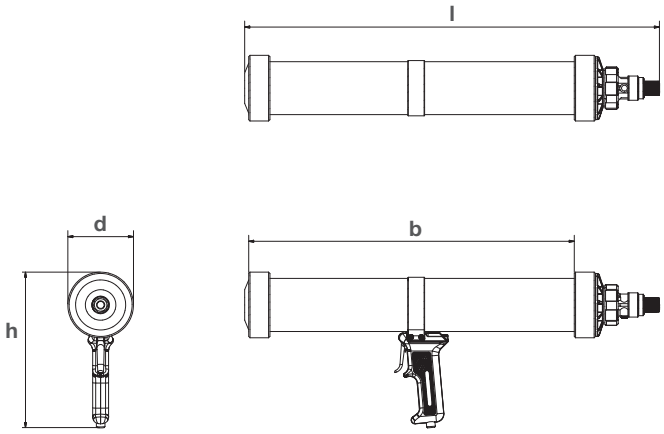

Product:	Article number:	Packaging:
DP1C 2000-bu-340-101	178022	1 per Box
DP1C 3000-bu-340-101	178023	1 per Box
DP1C 4000-bu-340-101	178025	1 per Box

Matching MIXPAC™ cartridges

-

Compatible other

Bulk
400-4000mL

Conversion kits

-

Matching accessories

Nozzles - on pages 98-102.

AirFlow™ 1 HP Combi

310-600mL Cartridge & Sachet Dispenser

Regulators

- **Standard: 6.8bar (100psi)**
- Options available:
  - 3.4bar (50psi)
  - 5.2bar (75psi)
  - 8.5bar (125psi)

Model shown: AirFlow 1 HP Combi 310ml

Features

- Epoxy coated aluminum handle
- Variable speed regulator
- 6.8bar (100psi) regulator
- Anodized aluminum barrel
- Piston driven rod action

Benefits

- Ergonomically designed for comfort
- For precise control, smooth material flow
- Fitted as standard - others are available
- For long life dispensing
- Greater control of material flow

Applications

Bonding

Sealing

Product by range

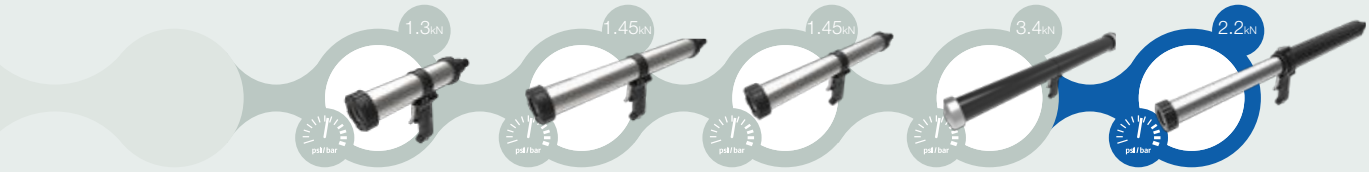

The **AirFlow 1 HP Combi** 1-component pnuematic dispensers piston driven rod action gives you greater control of material flow with a 6.8bar (100psi) regulator fitted as standard.

Specifications

- Weight: 1.95-2.46kg / 4.2-5.4lbs
- Barrel Length: 216mm-362mm / 8.5in-14.3in
- Maximum Thrust: 2.2kN
- Maximum Pneumatic Pressure: 6.8bar (100psi)
- Handle Material: Epoxy Coated Aluminum
- Barrel Material: Anodized Aluminum
- Tool Component Approvals: CE, REACH
- Cartridge Capacity: 310mL (10.5oz), 400mL (13.5oz)
- Sachet Capacity: 310mL (10.5oz), 400mL (13.5oz), 600mL (20.3oz)
- Standard Color: Black/Red
- Nozzle Dimension: ø38mm / 1.5in
- Customized versions on demand

Dimensions (mm/in)

product	height (h)	length (l)	depth (d)	barrel (b)
HP Combi 310	230 /9.1	570 /22.4	80 /3.1	216 /8.5
HP Combi 400	230 /9.1	642 /25.3	80 /3.1	251 /9.9
HP Combi 600	230 /9.1	861 /33.9	80 /3.1	362 /14.3

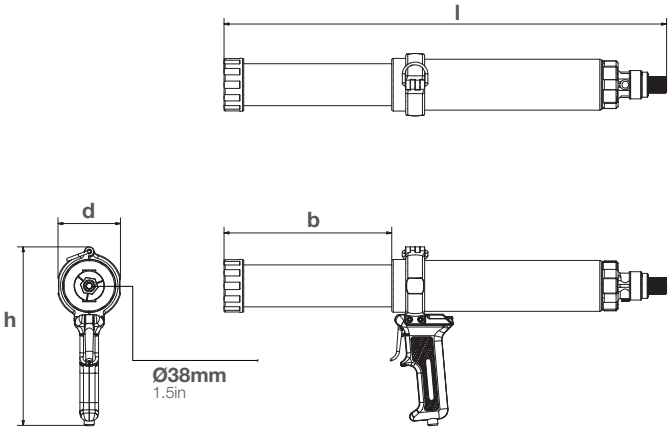

Product:	Article number:	Packaging:
DP1C 310-cm-220-101	178092 (61004-HP for US)	1 per Box
DP1C 400-cm-220-101	178096	1 per Box
DP1C 600-cm-220-101	178098	1 per Box

Matching MIXPAC™ cartridges

Peeler Cartridge
310 mL

Compatible cartridges and sachets

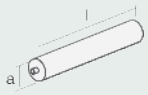

Plastic Cartridge
310mL HPDE/PP/PA

	mm	inch
l	216.0	8.5
a	Ø48.2	Ø 1.8

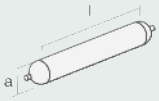

Sachet
310mL

	mm	inch
l	220.0	8.66
a	Ø 50.0	Ø 1.97

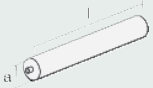

Plastic Cartridge
400mL HPDE/PA

	mm	inch
l	256.0	10.1
a	Ø 49.0	Ø 1.9

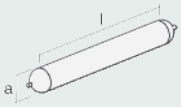

Sachet
400mL

	mm	inch
l	258.0	10.16
a	Ø 50.0	Ø 1.97

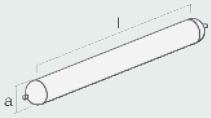

Sachet
600mL

	mm	inch
l	335.0	13.2
a	Ø 50.0	Ø 2.0

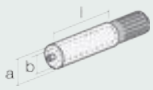

Plastic Cartridge
150mL 1:1, 2:1, 10:1 PP

		mm	inch
	l	117	4.6
	a	Ø 50.0	Ø 1.9
1:1	b	Ø 32.0	Ø 1.2
2:1	b	Ø 26.0	Ø 1.0
10:1	b	Ø 14.3	Ø 0.5

Conversion kits

-

Matching accessories

Nozzles - on pages 98-102.

AirFlow™ 2 Cartridge

310/400mL Cartridge Dispenser

Regulators

- **Standard: 6.8bar (100psi)**
- Options available:
  - 3.4bar (50psi)
  - 5.2bar (75psi)
  - 8.5bar (125psi)

Model shown: AirFlow 2 Cartridge 310mL

Features

- Glass filled nylon handle
- Variable speed regulator
- Anodized aluminum barrel
- 6.8bar (100psi) regulator
- Direct acting mechanism
- Swivel hose

Benefits

- Ergonomically designed for comfort
- For precise control, smooth material flow
- Lightweight and long life
- Fitted as standard - others are available
- Air pressure applied direct to plunger
- For easy connection

Applications

Bonding

Sealing

Product by range

AirFlow 2 Cartridge | AirFlow 2 Sachet | AirFlow 2 Combi

The **AirFlow 2 Cartridge** 1-component pnuematic dispenser comes with a glass filled nylon handle for added comfort. The variable speed regulator minimizes flow-on giving you smooth material flow for all your applications.

Specifications

- Weight: 0.73-0.81kg / 1.6-1.7lbs
- Frame Length: 228mm-267mm / 9.0in-10.5in
- Maximum Thrust: 1.2kN
- Maximum Pneumatic Pressure: 6.8bar (100psi)
- Handle Material: Glass Filled Nylon
- Barrel Material: Anodized Aluminum
- Tool Component Approvals: CE, REACH
- Cartridge Capacity:310mL (10.5oz), 400mL (13.5oz)
- Standard Color: Black/Grey
- Nozzle Dimension: ø38mm / 1.5in
- Customized versions on demand

Dimensions (mm/in)

product	height (h)	length (l)	depth (d)	barrel (b)
Cartridge 310	242 /9.5	282 /11.1	69 /2.7	228 /9.0
Cartridge 400	242 /9.5	322 /12.7	69 /2.7	267 /10.5

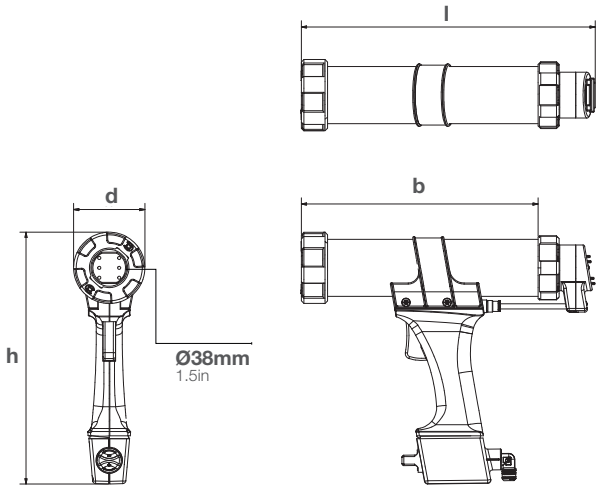

Product:	Article number:	Packaging:
DP1C 310-ca-120-201	178170 (61001 for US)	10 per Box (1 per Box for US)
DP1C 400-ca-130-201	178172	10 per Box

Matching MIXPAC™ cartridges

-

Compatible cartridges

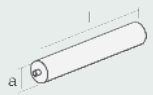

Plastic Cartridge
310mL HPDE/PP/PA

	mm	inch
l	216.0	8.5
a	Ø48.2	Ø 1.8

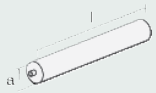

Plastic Cartridge**
400mL HPDE/PA

	mm	inch
l	256.0	10.1
a	Ø 49.0	Ø 1.9

**400mL version is not compatible with 310mL cartridges

Cardboard cartridges should not be used with the AirFlow 2 Cartridge.

Conversion kits

-

Matching accessories

Nozzles - on pages 98-102.

AirFlow™ 2 Sachet

310-600mL Sachet Dispenser

Regulators

- **Standard: 6.8bar (100psi)**
- Options available:
  - 3.4bar (50psi)
  - 5.2bar (75psi)
  - 8.5bar (125psi)

Model shown: AirFlow 2 Sachet 310mL

Features

- Glass filled nylon handle
- Floating plunger with tethered piston system
- Integrated handle
- 6.8bar (100psi) regulator
- Quick exhaust valve

Benefits

- Ergonomically designed for comfort
- Minimizes flow-on
- Quick adjustment of pressure regulator
- Fitted as standard - others are available
- Minimizes waste of material

Applications

Bonding

Sealing

Product by range

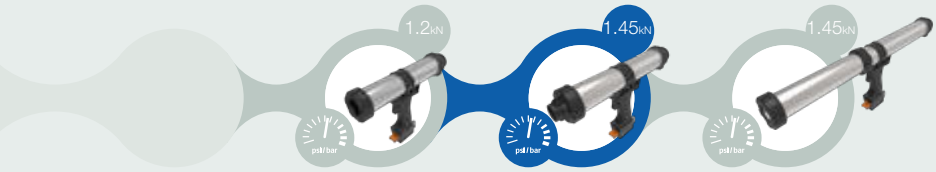

AirFlow 2 Cartridge | **AirFlow 2 Sachet** | AirFlow 2 Combi

The **AirFlow 2 Sachet** 1-component pnuematic dispenser has a 6.8bar (100psi) regulator fitted as standard with a variable speed regulator which minimizes flow-on, giving you precise control for all your applications.

Specifications

- Weight: 0.95-1.12kg / 2.1-2.5lbs
- Frame Length: 290mm-437mm / 11.4in-17.2in
- Maximum Thrust: 1.45kN
- Maximum Pneumatic Pressure: 6.8bar (100psi)
- Handle Material: Glass Filled Nylon
- Barrel Material: Anodized Aluminum
- Tool Component Approvals: CE, REACH
- Sachet Capacity: 310mL (10.5oz), 400mL (13.5oz), 600mL (20.3oz)
- Standard Color: Black/Grey
- Nozzle Dimension: ø38mm / 1.5in
- Customized versions on demand

Dimensions (mm/in)

product	height (h)	length (l)	depth (d)	barrel (b)
Sachet 310	242 /9.5	345 /13.6	69 /2.7	290 /11.4
Sachet 400	242 /9.5	386 /15.2	69 /2.7	332 /13.1
Sachet 600	242 /9.5	492 /19.4	69 /2.7	437 /17.2

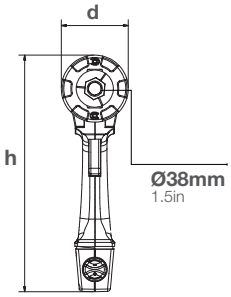

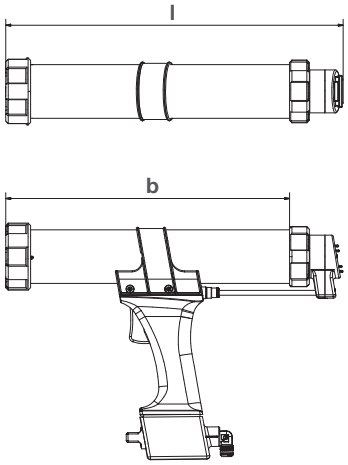

Product:	Article number:	Packaging:
DP1C 310-sa-145-201	178183 (61006-10 for US)	10 per Box (1 per Box for US)
DP1C 400-sa-145-201	178186 (61006-400 for US)	10 per Box (1 per Box for US)
DP1C 600-sa-145-201	178189 (61006-20 for US)	10 per Box (1 per Box for US)

Matching MIXPAC™ cartridges

-

Compatible sachets

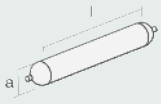

Sachet
310mL

	mm	inch
l	220.0	8.66
a	Ø 50.0	Ø 1.97

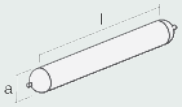

Sachet
400mL

	mm	inch
l	258.0	10.16
a	Ø 50.0	Ø 1.97

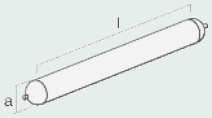

Sachet
600mL

	mm	inch
l	335.0	13.2
a	Ø 50.0	Ø 2.0

Conversion kits

-

Matching accessories

Nozzles - on pages 98-102.

AirFlow™ 2 Combi

310-600mL Cartridge & Sachet Dispenser

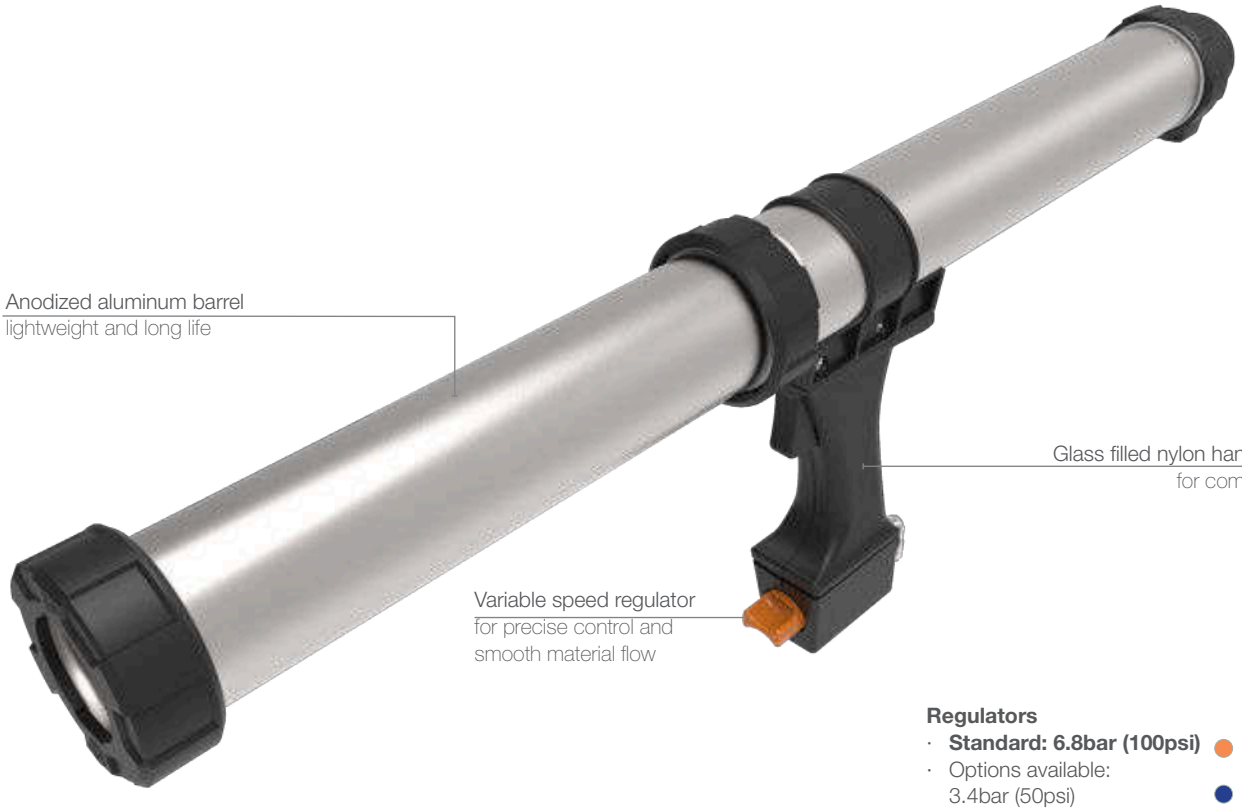

Regulators

- **Standard: 6.8bar (100psi)**
- Options available:
  3.4bar (50psi)
  5.2bar (75psi)
  8.5bar (125psi)

Model shown: AirFlow 2 Combi 310mL

Features

- Glass filled nylon handle
- Integrated handle
- 6.8bar (100psi) regulator
- Quick exhaust valve
- Rod driven plunger

Benefits

- Ergonomically designed for comfort
- Quick adjustment of pressure regulator
- Fitted as standard - others are available
- Minimizes flow-on
- For precise control and smooth material flow

Applications

Bonding

Sealing

Product by range

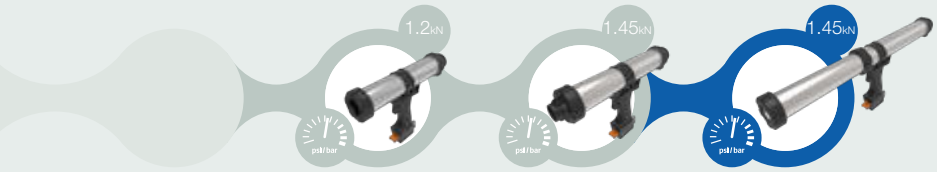

AirFlow 2 Cartridge | AirFlow 2 Sachet | **AirFlow 2 Combi**

The **AirFlow 2 Combi** 1-component pneumatic dispenser comes with a glass filled nylon handle for added comfort and quick exhaust valve minimizing material waste.

Specifications

- Weight: 1.3-1.64kg / 2.8-3.6lbs
- Frame Length: 211mm-357mm / 8.3in-14.1in
- Maximum Thrust: 1.45kN
- Maximum Pneumatic Pressure: 6.8bar (100psi)
- Handle Material: Glass Filled Nylon
- Barrel Material: Anodized Aluminum
- Tool Component Approvals: CE, REACH
- Cartridge Capacity: 310mL (10.5oz), 400mL (13.5oz)
- Sachet Capacity: 310mL (10.5oz), 400mL (13.5oz), 600mL (20.3oz)
- Standard Color: Black/Grey
- Nozzle Dimension: ø38mm / 1.5in
- Customized versions on demand

Dimensions (mm/in)

product	height (h)	length (l)	depth (d)	barrel (b)
Combi 310	242 /9.5	557 /21.9	69 /2.7	211 /8.3
Combi 400	242 /9.5	633 /24.9	69 /2.7	249 /9.8
Combi 600	242 /9.5	849 /33.4	69 /2.7	357 /14.1

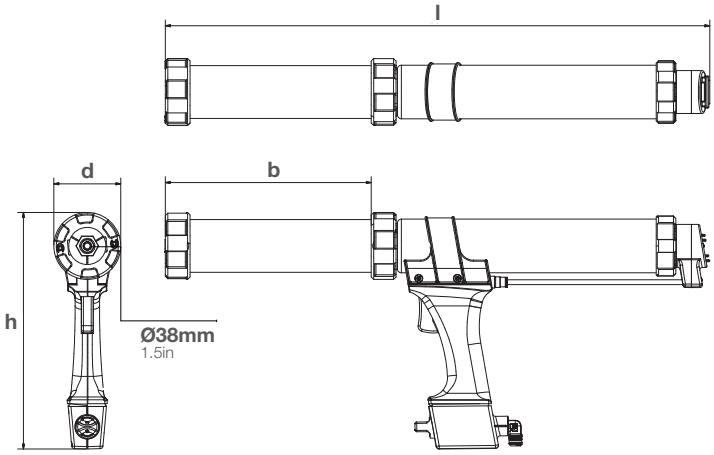

Product:	Article number:	Packaging:
DP1C 310-cm-145-201	178234 (61004-LP for US)	10 per Box (1 per Box for US)
DP1C 400-cm-145-201	178240	10 per Box
DP1C 600-cm-145-201	178242	10 per Box

Matching MIXPAC™ cartridges

Peeler Cartridge
310 mL

Compatible cartridges and sachets

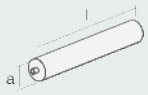

Plastic Cartridge
310mL HPDE/PP/PA

	mm	inch
l	216.0	8.5
a	Ø48.2	Ø 1.8

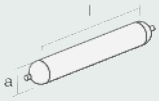

Sachet
310mL

	mm	inch
l	220.0	8.66
a	Ø 50.0	Ø 1.97

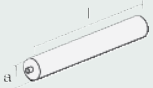

Plastic Cartridge
400mL HPDE/PA

	mm	inch
l	256.0	10.1
a	Ø 49.0	Ø 1.9

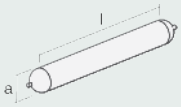

Sachet
400mL

	mm	inch
l	258.0	10.16
a	Ø 50.0	Ø 1.97

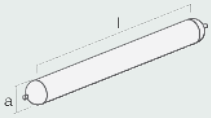

Sachet
600mL

	mm	inch
l	335.0	13.2
a	Ø 50.0	Ø 2.0

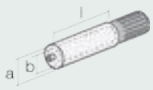

Plastic Cartridge
150mL 1:1, 2:1, 10:1 PP

		mm	inch
	l	117	4.6
	a	Ø 50.0	Ø 1.9
1:1	b	Ø 32.0	Ø 1.2
2:1	b	Ø 26.0	Ø 1.0
10:1	b	Ø 14.3	Ø 0.5

Conversion kits

-

Matching accessories

On pages 98-102.

AirFlow™ 3 Cartridge

310/400mL Cartridge Dispenser

Anodized aluminum barrel
lightweight and long life

Glass reinforced nylon handle
ergonomically designed for comfort

Variable speed regulator
for precise control and
smooth material flow

Regulators

- **Standard: 6.8bar (100psi)**
- Options available:
  - 3.4bar (50psi)
  - 5.2bar (75psi)
  - 8.5bar (125psi)

Model shown: AirFlow 3 Cartridge 310mL

Features

- Glass reinforced nylon handle
- Variable speed regulator
- Anodized aluminum barrel
- 6.8bar (100psi) regulator
- Built-in silencer (less than 70dB)
- Direct acting mechanism

Benefits

- Ergonomically designed for comfort
- For precise control, smooth material flow
- Lightweight and long life
- Fitted as standard - others are available
- Lowers noise level
- Air pressure applied direct to plunger

Applications

Bonding

Sealing

Product by range

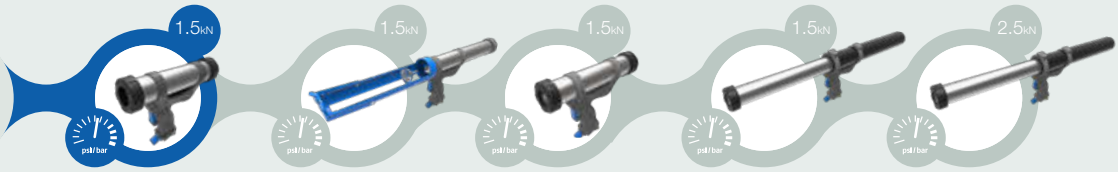

AirFlow 3 Cartridge | AirFlow 3 Quart Cartridge | AirFlow 3 Sachet | AirFlow 3 Compact Combi | AirFlow 3 Combi HP

The **AirFlow 3 Cartridge** 1-component pneumatic dispenser is designed for use with low to medium viscosity sealants and adhesives. It comes with a glass reinforced nylon handle and built-in silencer - less than 70dB.

Specifications

- Weight: 0.60-0.77kg / 1.3-1.7lbs
- Barrel Length: 235-271mm / 9.2-10.7in
- Maximum Thrust: 1.5kN
- Maximum Pneumatic Pressure: 6.8bar (100psi)
- Handle Material: Glass Filled Nylon
- Barrel Material: Anodized Aluminum
- Tool Component Approvals: CE, REACH
- Cartridge Capacity: 310mL (10.5oz), 400mL (13.5oz)
- Standard Color: Black/Grey
- Nozzle Dimension: ø38mm / 1.5in
- Customized versions on demand

Dimensions (mm/in)

product	height (h)	length (l)	depth (d)	barrel (b)
Cartridge 310	251 /9.9	235 /9.2	69 /2.7	235 /9.2
Cartridge 400	251 /9.9	271 /10.7	69 /2.7	271 /10.7

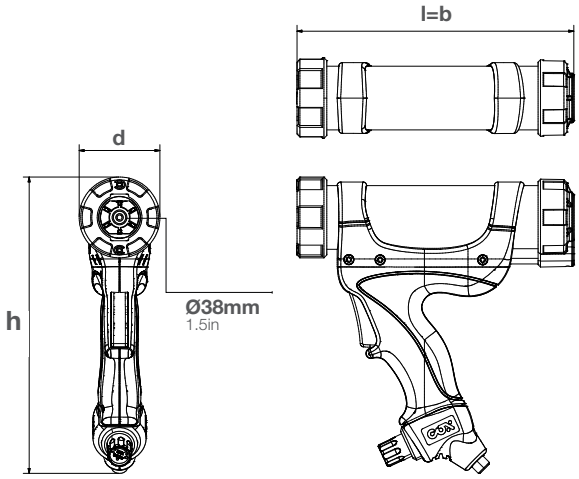

Product:	Article number:	Packaging:
DP1C 310-ca-150-301	181296 (63001 for US)	10 per Box
DP1C 400-ca -150-01	181300	10 per Box

Matching MIXPAC™ cartridges

-

Compatible cartridges

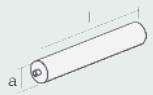

Plastic Cartridge
310mL HPDE/PP/PA

	mm	inch
l	216.0	8.5
a	Ø48.2	Ø 1.8

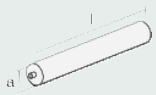

Plastic Cartridge**
400mL HPDE/PA

	mm	inch
l	256.0	10.1
a	Ø 49.0	Ø 1.9

**400mL version is not compatible with 310mL cartridges

Cardboard cartridges should not be used with the AirFlow 2 Cartridge.

Conversion kits

-

Matching accessories

Nozzles - on pages 98-102.

AirFlow™ 3 Quart

946mL Cartridge Dispenser

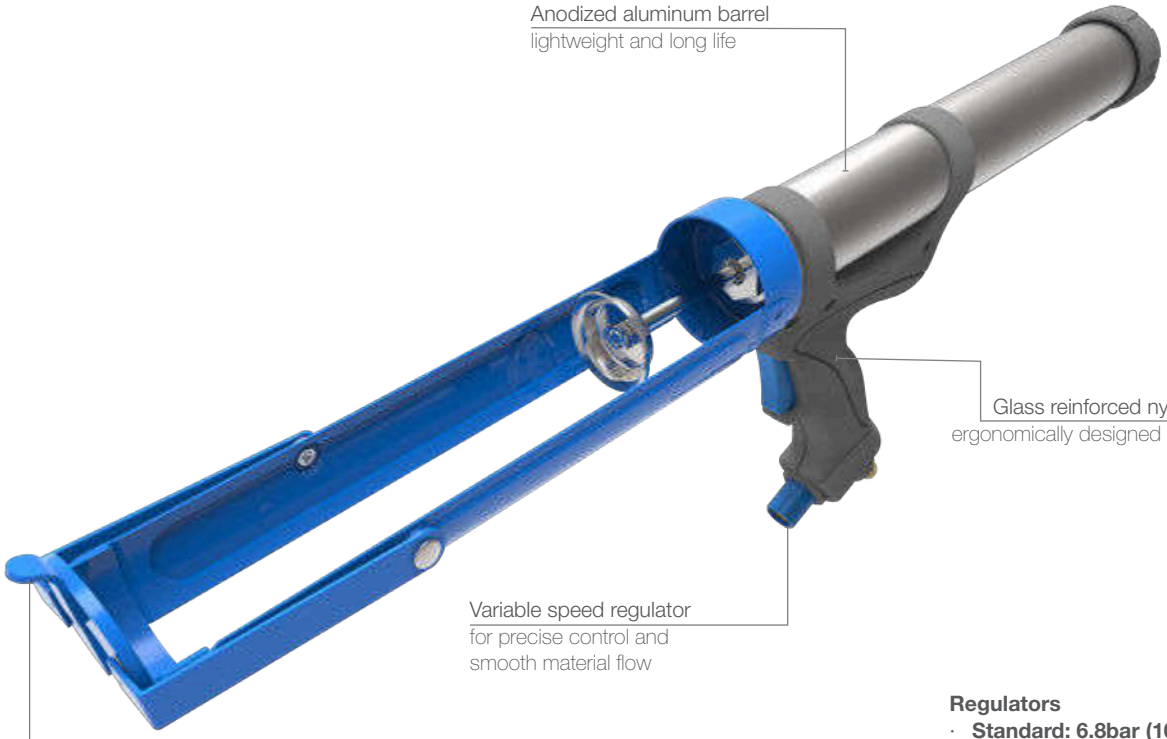

Regulators

- **Standard: 6.8bar (100psi)**
- Options available:
  - 3.4bar (50psi)
  - 5.2bar (75psi)
  - 8.5bar (125psi)

Model shown: AirFlow 3 Quart Cartridge 946mL

Features

- Built-in silencer (less than 70dB)
- Variable speed regulator
- Glass filled nylon handle
- 6.8bar (100psi) regulator
- Built-in air hose
- Piston driven rod action

Benefits

- Lowers the noise level
- For precise control, smooth material flow
- Ergonomically designed for comfort
- Fitted as standard - others are available
- For safety
- Greater control of material flow

Applications

Bonding

Sealing

Product by range

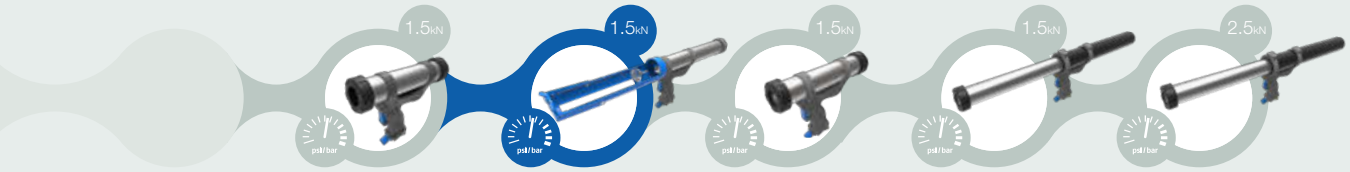

AirFlow 3 Cartridge | **AirFlow 3 Quart Cartridge** | AirFlow 3 Sachet | AirFlow 3 Compact Combi | AirFlow 3 Combi HP

The **AirFlow 3 Quart Cartridge** 1-component pneumatic dispenser comes with a built-in air hose and silencer - less than 70dB, while the piston driven rod plunger gives you precise control and smooth material flow.

Specifications

- Weight: 1.8kg / 3.9lbs
- Frame Length: 355mm / 14in
- Maximum Thrust: 1.5kN
- Maximum Pneumatic Pressure: 6.8bar (100psi)
- Handle Material: Glass Filled Nylon
- Barrel Material: Anodized Aluminum
- Frame Material: Epoxy Coated Steel
- Tool Component Approvals: CE, REACH
- Cartridge Capacity: 946mL (32oz)
- Standard Color: Grey/Blue
- Customized versions on demand

Dimensions

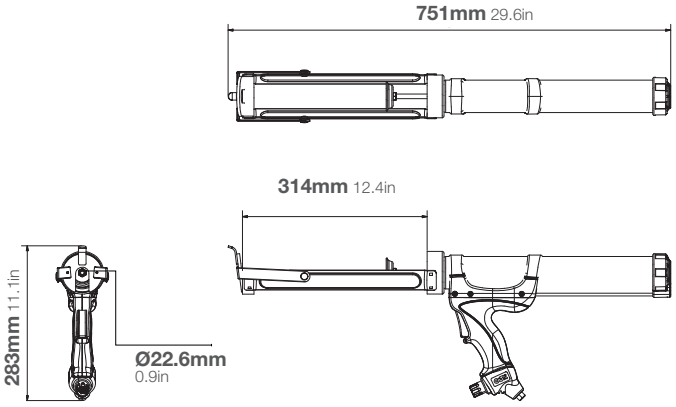

Product:
Extended Quart Cartridge

Article number:
63002-UP for US

Packaging:
1 per Box

Matching MIXPAC™ cartridges

-

Compatible cartridges

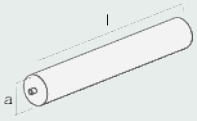

Plastic Cartridge-Quart
946mL

	mm	inch
l	320	12.6
a	Ø 67.0	Ø 2.6

Conversion kits

-

Matching accessories

Nozzles - on pages 98-102.

AirFlow™ 3 Sachet

310-600mL Sachet Dispenser

Anodized aluminum barrel
lightweight and long life

Glass reinforced nylon handle
ergonomically designed for comfort

Variable speed regulator
for precise control and
smooth material flow

Regulators

- **Standard: 6.8bar (100psi)**
- Options available:
  - 3.4bar (50psi)
  - 5.2bar (75psi)
  - 8.5bar (125psi)

Model shown: AirFlow 3 Sachet 310mL

Features

- Floating plunger system
- Built-in silencer (less than 70dB)
- Variable speed regulator
- Glass reinforced nylon handle
- 6.8bar (100psi) regulator
- Built-in air hose

Benefits

- Minimizes waste of material
- Lowers the noise level
- For precise control, smooth material flow
- Ergonomically designed for comfort
- Fitted as standard - others are available
- For safety

Applications

Bonding

Sealing

Product by range

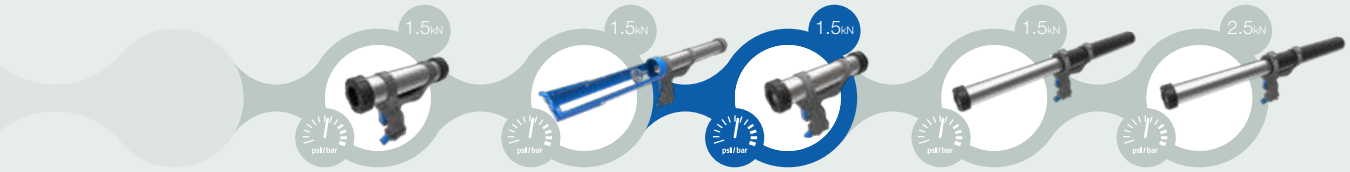

AirFlow 3 Cartridge | AirFlow 3 Quart Cartridge | **AirFlow 3 Sachet** | AirFlow 3 Compact Combi | AirFlow 3 Combi HP

The **AirFlow 3 Sachet** 1-component pneumatic dispenser designed for use with low to medium viscosity sealants and adhesives. A built-in silencer - less than 70dB and floating plunger system helps minimize material waste.

Specifications

- Weight: 0.78-0.82kg / 1.7-1.8lbs
- Barrel Length: 297-436mm / 11.7-17.2in
- Maximum Thrust: 1.5kN
- Maximum Pneumatic Pressure: 6.8bar (100psi)
- Handle Material: Glass Filled Nylon
- Barrel Material: Anodized Aluminum
- Tool Component Approvals: CE, REACH
- Sachet Capacity: 310mL (10.5oz), 400mL (13.5oz), 600mL (20.3oz)
- Standard Colour: Black/Grey
- Nozzle Dimension: ø38mm / 1.5in
- Customized versions on demand

Dimensions (mm/in)

product	height (h)	length (l)	depth (d)	barrel (b)
Sachet 310	251 /9.9	297 /11.7	69 /2.7	297 /11.7
Sachet 400	251 /9.9	329 /12.9	69 /2.7	329 /12.9
Sachet 600	251 /9.9	436 /17.2	69 /2.7	436 /17.2

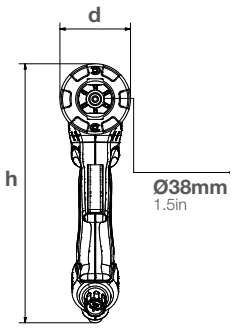

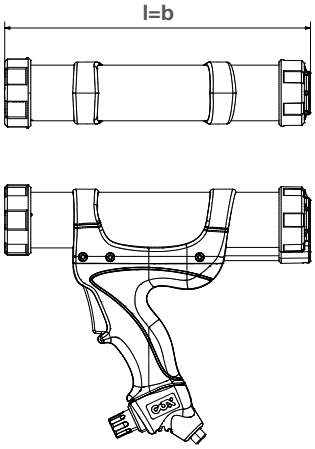

Product:	Article number:	Packaging:
DP1C 310-sa-150-301	181259 (63006-300 for US)	10 per Box
DP1C 400-sa-150-301	181263 (63006-400 for US)	10 per Box
DP1C 600-sa-150-301	181272 (63006-600 for US)	10 per Box

Matching MIXPAC™ cartridges

-

Compatible sachets

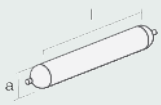

Sachet
310mL

	mm	inch
l	220.0	8.66
a	Ø 50.0	Ø 1.97

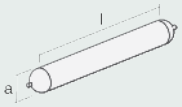

Sachet
400mL

	mm	inch
l	258.0	10.16
a	Ø 50.0	Ø 1.97

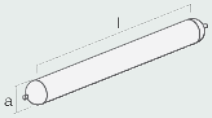

Sachet
600mL

	mm	inch
l	335.0	13.2
a	Ø 50.0	Ø 2.0

Conversion kits

-

Matching accessories

Nozzles - on pages 98-102.

AirFlow™ 3 Compact Combi

310-600mL Cartridge & Sachet Dispenser

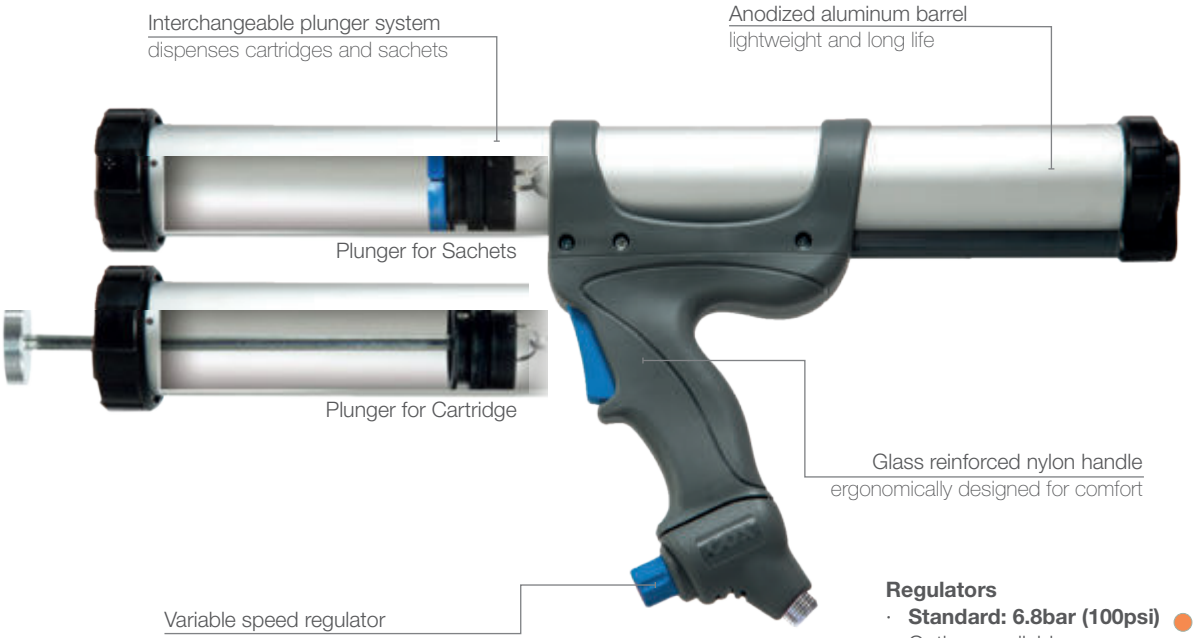

Regulators

- **Standard: 6.8bar (100psi)**
- Options available:
  3.4bar (50psi)
  5.2bar (75psi)
  8.5bar (125psi)

Model shown: AirFlow 3 Compact Combi 600mL

Features

- Floating plunger system
- Built-in silencer (less than 70dB)
- Variable speed regulator
- Glass reinforced nylon handle
- 6.8bar (100psi) regulator
- Built-in air hose

Benefits

- Minimizes waste of material
- Lowers the noise level
- For precise control, smooth material flow
- Ergonomically designed for comfort
- Fitted as standard - others are available
- For safety

Applications

Bonding

Sealing

Product by range

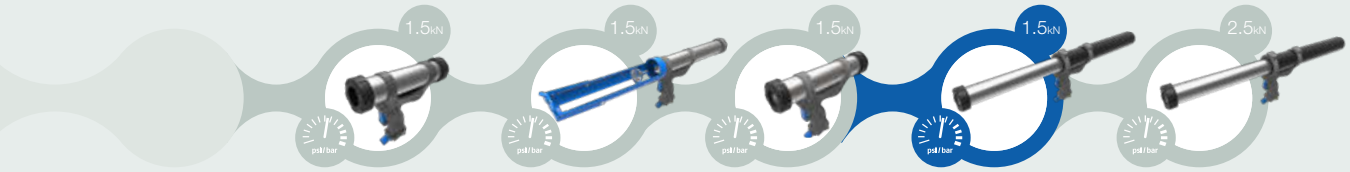

AirFlow 3 Cartridge | AirFlow 3 Quart Cartridge | AirFlow 3 Sachet | **AirFlow 3 Compact Combi** | AirFlow 3 Combi HP

The **AirFlow 3 Compact Combi** 1-component pneumatic dispensers interchangeable plunger systems offers great flexibility, with 6.8bar (100psi) regulator is fitted as standard.

Specifications

- Weight: 0.99kg / 2.2lbs
- Barrel Length: 464mm / 18.27in
- Maximum Thrust: 1.5kN
- Maximum Pneumatic Pressure: 6.8bar (100psi)
- Handle Material: Glass Filled Nylon
- Barrel Material: Anodized Aluminum
- Tool Component Approvals: CE, REACH
- Cartridge Capacity: 310mL (10.5oz)
- Sachet Capacity: 310mL (10.5oz), 600mL (20.3oz)
- Standard Color: Black/Grey
- Nozzle Dimension: ø38mm / 1.5in
- Customized versions on demand

Dimensions

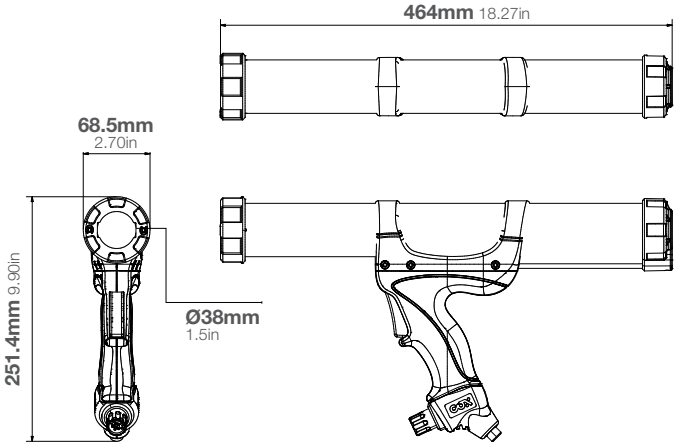

Product:
DP1C 600-cm-150-301

Article number:
181326 (63003 for US)

Packaging:
10 per Box (1 per Box for US)

Matching MIXPAC™ cartridges

Peeler Cartridge
310 mL

Compatible cartridges and sachets

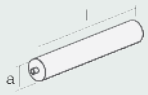

Plastic Cartridge
310mL HPDE/PP/PA

	mm	inch
l	216.0	8.5
a	Ø48.2	Ø 1.8

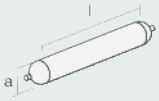

Sachet
310mL

	mm	inch
l	220.0	8.66
a	Ø 50.0	Ø 1.97

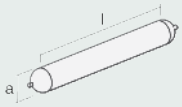

Sachet
400mL

	mm	inch
l	258.0	10.16
a	Ø 50.0	Ø 1.97

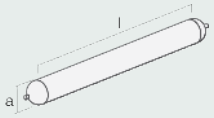

Sachet
600mL

	mm	inch
l	335.0	13.2
a	Ø 50.0	Ø 2.0

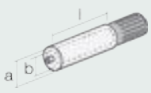

Plastic Cartridge
150mL 1:1, 2:1, 10:1 PP

		mm	inch
	l	117	4.6
	a	Ø 50.0	Ø 1.9
1:1	b	Ø 32.0	Ø 1.2
2:1	b	Ø 26.0	Ø 1.0
10:1	b	Ø 14.3	Ø 0.5

Conversion kits

-

Matching accessories

Nozzles and Sachet/Cartridge Plunger - on page 98-102.

AirFlow™ 3 HP Combi

310-600mL Cartridge & Sachet Dispenser

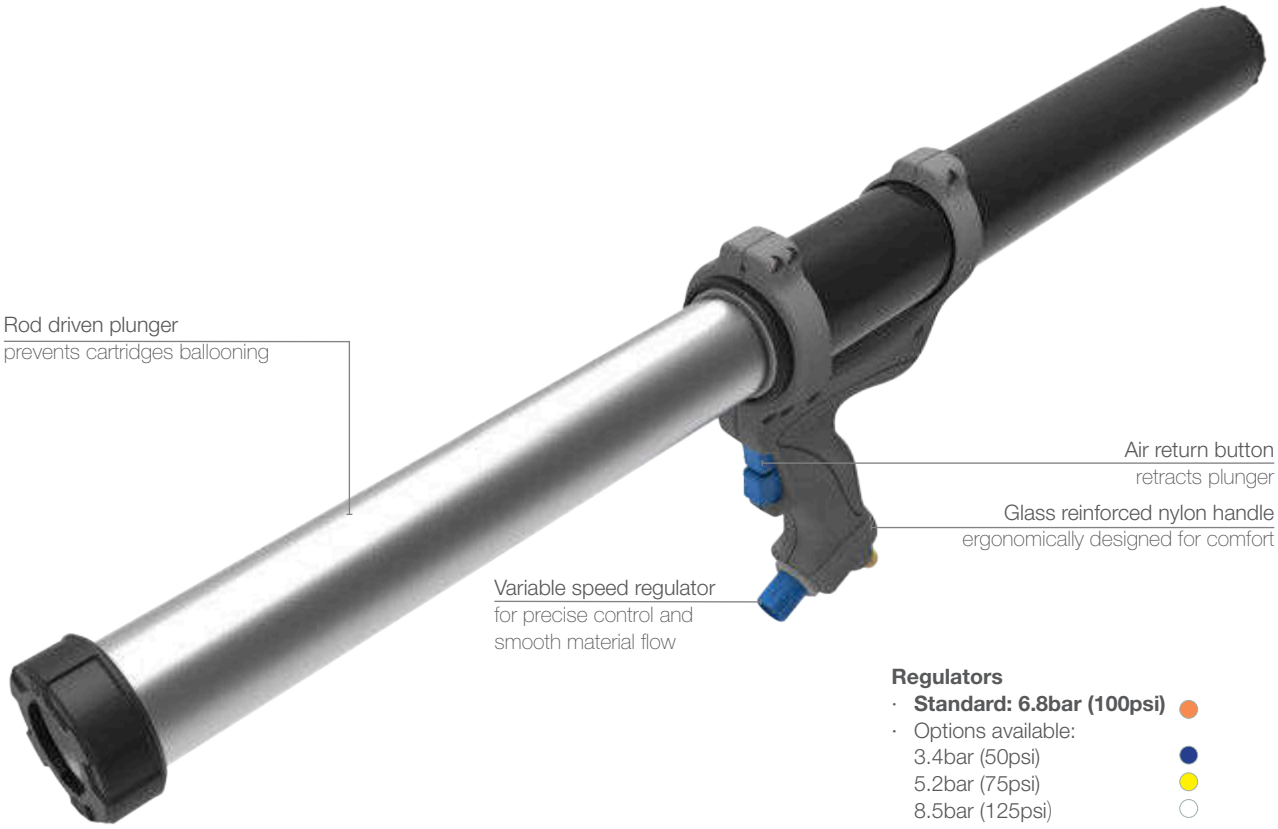

Regulators

- **Standard: 6.8bar (100psi)**
- Options available:
  - 3.4bar (50psi)
  - 5.2bar (75psi)
  - 8.5bar (125psi)

Model shown: AirFlow 3 HP Combi 600mL

Features

- Variable speed regulator
- Built-in silencer (less than 70dB)
- Rod driven plunger
- Fitted as standard with a 6.8bar (100psi) regulator

Benefits

- For precise control, smooth material flow
- Lowers the noise level
- Prevents cartridges ballooning
- Others are available

Applications

Bonding

Sealing

Product by range

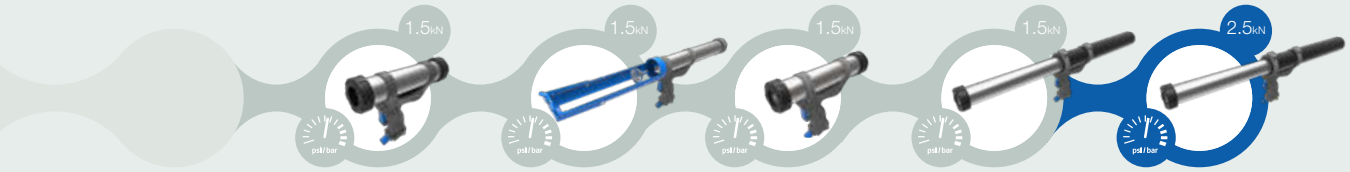

AirFlow 3 Cartridge | AirFlow 3 Quart Cartridge | AirFlow 3 Sachet | AirFlow 3 Compact Combi | **AirFlow 3 Combi HP**

The **AirFlow 3 HP Combi** 1-component pnuematic dispenser designed for use with low to high viscosity sealants and adhesives. The variable speed regulator and piston driven rod plunger gives you precise control.

Specifications

- Weight: 1.73-1.83kg / 3.8-4.0lbs
- Barrel Length: 210-347mm / 8.3-13.6in
- Maximum Thrust: 2.5kN
- Maximum Pneumatic Pressure: 6.8bar (100psi)
- Handle Material: Glass Filled Nylon
- Barrel Material: Anodized Aluminum
- Tool Component Approvals: CE, REACH
- Cartridge Capacity: 310mL (10.5oz), 400mL (13.5oz)
- Sachet Capacity: 310mL (10.5oz), 400mL (13.5oz), 600mL (20.3oz)
- Standard Color: Black/Grey
- Nozzle Dimension: ø38mm / 1.5in
- Customized versions on demand

Dimensions (mm/in)

product	height (h)	length (l)	depth (d)	barrel (b)
Combi HP 310	276 /10.9	549 /21.6	82 /3.2	210 /8.3
Combi HP 400	276 /10.9	625 /24.6	82 /3.2	248 /9.8
Combi HP 600	285 /11.2	831 /32.7	82 /3.2	347 /13.6

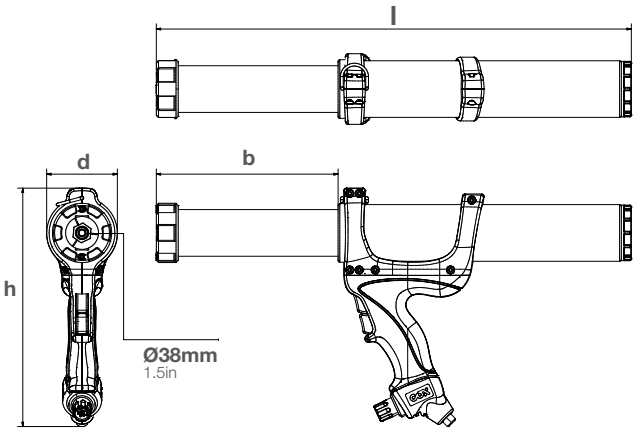

Product:	Article number:	Packaging:
DP1C 310-cm-250-301	181328 (63004-300HP for US)	1 per Box
DP1C 400-cm-250-301	181330	1 per Box
DP1C 600-cm-250-301	181332 (63004-600HP for US)	1 per Box

Matching MIXPAC™ cartridges

Peeler Cartridge
310 mL

Compatible cartridges and sachets

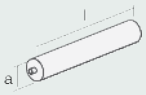

Plastic Cartridge
310mL HPDE/PP/PA

	mm	inch
l	216.0	8.5
a	Ø48.2	Ø 1.8

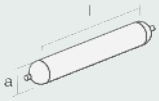

Sachet
310mL

	mm	inch
l	220.0	8.66
a	Ø 50.0	Ø 1.97

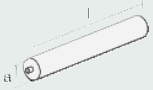

Plastic Cartridge
400mL HPDE/PA

	mm	inch
l	256.0	10.1
a	Ø 49.0	Ø 1.9

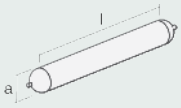

Sachet
400mL

	mm	inch
l	258.0	10.16
a	Ø 50.0	Ø 1.97

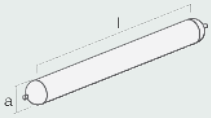

Sachet
600mL

	mm	inch
l	335.0	13.2
a	Ø 50.0	Ø 2.0

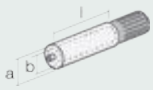

Plastic Cartridge
150mL 1:1, 2:1, 10:1 PP

		mm	inch
	l	117	4.6
	a	Ø 50.0	Ø 1.9
1:1	b	Ø 32.0	Ø 1.2
2:1	b	Ø 26.0	Ø 1.0
10:1	b	Ø 14.3	Ø 0.5

Conversion kits

-

Matching accessories

Nozzles - on pages 98-102.

JetFlow™ 3 Cartridge

310mL Cartridge Dispenser

Regulators

- **Standard: 6.8bar (100psi)**
- Options available:
  - 3.4bar (50psi)
  - 5.2bar (75psi)
  - 8.5bar (125psi)

Model shown: JetFlow 3 Cartridge 310mL

Features

- Glass reinforced nylon handle
- Variable speed regulator
- Fitted as standard with a 6.8bar (100psi) regulator
- Front cap selector to change function
- Direct acting mechanism
- Built-in silencer (less than 70dB)

Benefits

- Ergonomically designed for comfort
- For precise control, smooth material flow
- Other options available
- Easily adjust between bead and spray with just one twist
- Air pressure applied direct to plunger
- Lowers the noise level

Applications

Bonding

Sealing

Product by range

JetFlow 3 Cartridge | JetFlow 3 Sachet | JetFlow 3 Compact Combi

The **JetFlow 3 Cartridge** 1-component pneumatic dispensers innovative front cap design allows for quick change between bead and spray functions.

Specifications

- Weight: 1.22kg / 2.7lbs
- Barrel Length: 346.8mm / 13.7in
- Maximum Thrust: 1.45kN
- Maximum Pneumatic Pressure: 6.8bar (100psi)
- Handle Material: Glass Filled Nylon
- Barrel Material: Anodized Aluminum
- Tool Component Approvals: CE, REACH
- Cartridge Capacity: 310mL (10.5oz)
- Standard Color: Black/Grey
- Customized versions on demand

Dimensions

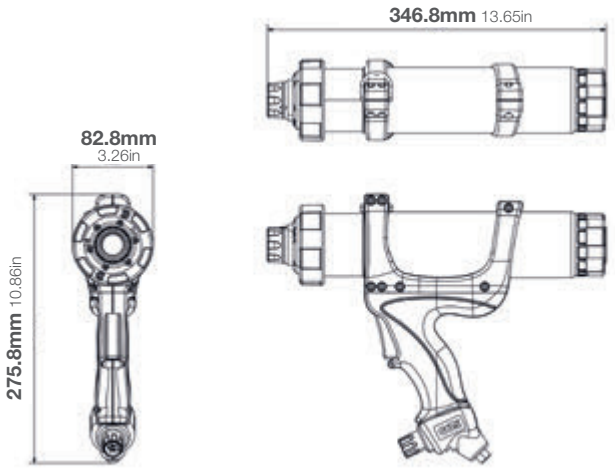

Product:
DP1C 310-ca-145-901

Article number:
159352 (63007-300C for US)

Packaging:
1 per Box

Matching MIXPAC™ cartridges

-

Compatible cartridges

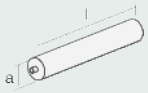

Plastic Cartridge
310mL HPDE/PP/PA

	mm	inch
l	216.0	8.5
a	Ø48.2	Ø 1.8

Conversion kits

-

Matching accessories

Spray nozzles – 3 variants on pages 98-102.

JetFlow™ 3 Sachet

310-600mL Sachet Dispenser

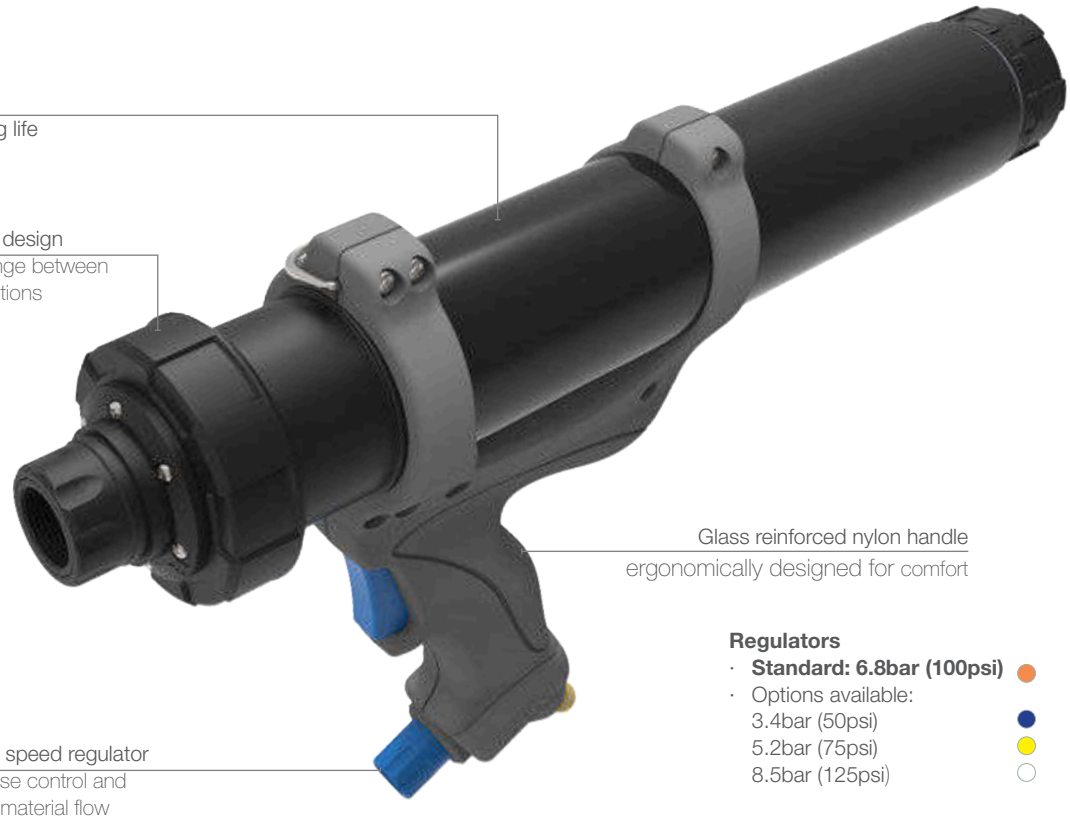

Regulators

- **Standard: 6.8bar (100psi)**
- Options available:
  3.4bar (50psi)
  5.2bar (75psi)
  8.5bar (125psi)

Model shown: JetFlow 3 Sachet 600mL

Features

- Glass reinforced nylon handle
- Variable speed regulator
- Fitted as standard with a 6.8bar (100psi) regulator
- Front cap selector to change function
- Floating plunger mechanism
- Built-in silencer (less than 70dB)

Benefits

- Ergonomically designed for comfort
- For precise control, smooth material flow
- Other options available
- Easily adjust between bead and spray with just one twist
- Minimizes waste of material
- Lowers the noise level

Applications

Bonding

Sealing

Product by range

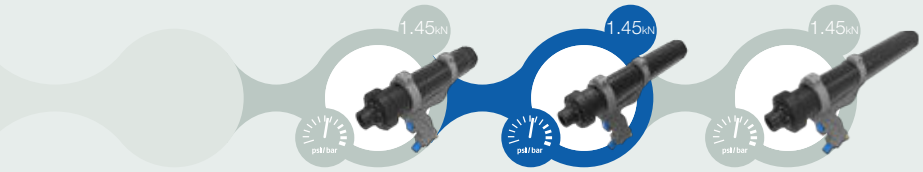

JetFlow 3 Cartridge | **JetFlow 3 Sachet** | JetFlow 3 Compact Combi

The **JetFlow 3 Sachet** 1-component pneumatic dispenser designed for use with low to medium viscosity sealants and adhesives, with built-in silencer - less than 70dB.

Specifications

- Weight: 1.24-1.47kg / 2.7-3.2lbs
- Barrel Length: 347-445mm / 13.7-17.5in
- Maximum Thrust: 1.45kN
- Maximum Pneumatic Pressure: 6.8bar (100psi)
- Handle Material: Glass Filled Nylon
- Barrel Material: Anodized Aluminuml
- Tool Component Approvals: CE, REACH
- Sachet Capacity: 310mL (10.5oz), 400mL (13.5oz) , 600mL (20.3oz)
- Standard Color: Black/Grey
- Customized versions on demand

Dimensions (mm/in)

product	height (h)	length (l)	depth (d)	barrel (b)
Sachet 310	276 /10.6	347 /13.7	83 /3.3	347 /13.7
Sachet 600	276 /10.6	445 /17.5	83 /3.3	445 /17.5

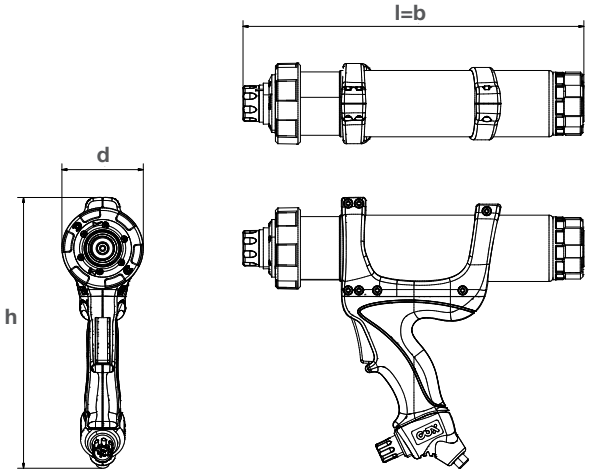

Product:	Article number:	Packaging:
DP1C 310-sa-145-901	181341 (63007-300S for US)	1 per Box
DP1C 600-sa-145-901	159355 (63007-600S for US)	1 per Box

Matching MIXPAC™ cartridges

-

Compatible sachets

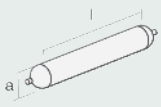

Sachet
310mL

	mm	inch
l	220.0	8.66
a	Ø 50.0	Ø 1.97

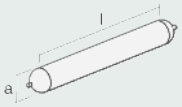

Sachet
400mL

	mm	inch
l	258.0	10.16
a	Ø 50.0	Ø 1.97

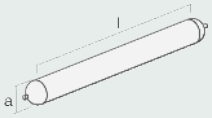

Sachet
600mL

	mm	inch
l	335.0	13.2
a	Ø 50.0	Ø 2.0

Conversion kits

-

Matching accessories

Spray nozzles – 3 variants on page 98-102.

JetFlow™ 3 Compact Combi

310-600mL Cartridge & Sachet Dispenser

Regulators

- **Standard: 6.8bar (100psi)**
- Options available:
  - 3.4bar (50psi)
  - 5.2bar (75psi)
  - 8.5bar (125psi)

Model shown: JetFlow 3 Compact Combi 600mL

Features

- Glass reinforced nylon handle
- Variable speed regulator
- Fitted as standard with a 6.8bar (100psi) regulator
- Front cap selector to change function
- Floating plunger mechanism
- Built-in silencer (less than 70dB)

Benefits

- Ergonomically designed for comfort
- For precise control, smooth material flow
- Other options available
- Easily adjust between bead and spray with just one twist
- Minimizes waste of material Lowers the noise level
- Lowers the noise level

Applications

Bonding

Sealing

Product by range

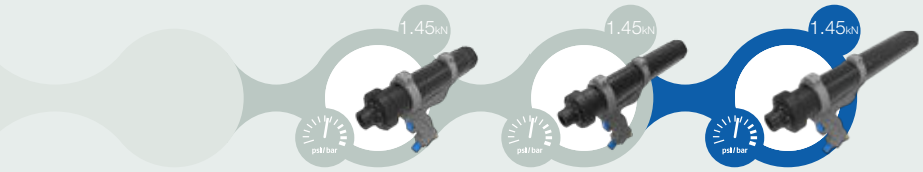

JetFlow 3 Cartridge | JetFlow 3 Sachet | **JetFlow 3 Compact Combi**

The **JetFlow 3 Compact Combi** 1-component pneumatic dispenser with innovative front cap design allows for quick change between bead and spray functions.

Specifications

- Weight: 1.76kg / 3.9lbs
- Barrel Length: 535.8mm / 21in
- Maximum Thrust: 1.45kN
- Maximum Pneumatic Pressure: 6.8bar (100psi)
- Handle Material: Glass Filled Nylon
- Barrel Material: Anodized Aluminum
- Tool Component Approvals: CE, REACH
- Cartridge Capacity: 310mL (10.5oz), 400mL (13.5oz)
- Sachet Capacity: 310mL (10.5oz), 400mL (13.5oz), 600mL (20.3oz)
- Standard Color: Black/Grey
- Customized versions on demand

Dimensions

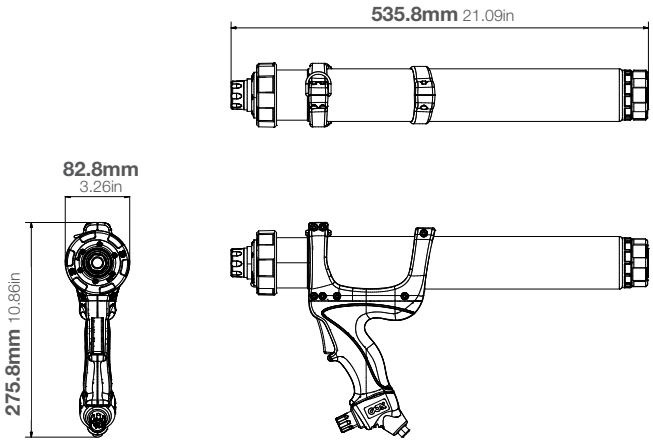

Product:
DP1C 600-cm-145-901

Article number:
181345

Packaging:
1 per Box

Matching MIXPAC™ cartridges

-

Compatible cartridges and sachets

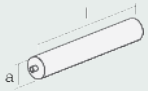

Plastic Cartridge
310mL HPDE/PP/PA

	mm	inch
l	216.0	8.5
a	Ø48.2	Ø 1.8

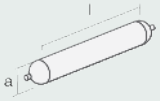

Sachet
310mL

	mm	inch
l	220.0	8.66
a	Ø 50.0	Ø 1.97

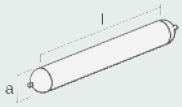

Sachet
400mL

	mm	inch
l	258.0	10.16
a	Ø 50.0	Ø 1.97

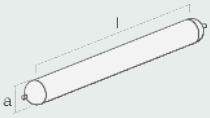

Sachet
600mL

	mm	inch
l	335.0	13.2
a	Ø 50.0	Ø 2.0

Conversion kits

-

Matching accessories

Spray nozzles – 3 variants on page 98-102.

Ultrapoint™ Air Bulk

800mL Bulk Dispenser

Regulators

- **Standard: 6.8bar (100psi)**
- Options available:
  - 3.4bar (50psi)
  - 5.2bar (75psi)
  - 8.5bar (125psi)

Model shown: Ultrapoint Air 800mL

Features

- Easily replaceable barrel and washer
- Choice of nozzles for pointing and grouting
- 6.8bar (100psi) regulator
- Return air feature

Benefits

- Greater efficiency neater, cleaner with less waste
- Mortar mixing paddle and two nozzles supplied
- Fitted as standard - others are available
- Plunger rods are automatically ready reloading

Applications

Gap Filling

Product by range

Ultrapoint Air

The **Utrapoint Bulk** 1-component pneumatic dispenser comes with a choice of nozzles for pointing andf grouting for specialist masonary repair and high volume dispensing.

Specifications

- Weight: 0.99kg / 2.2lbs
- Frame Length: 358mm / 18.27in
- Maximum Thrust: 1.45kN
- Maximum Pneumatic Pressure: 6.8bar (100psi)
- Handle Material: Aluminum
- Frame Material: Epoxy Coated Steel
- Barrel Material: Anodized Aluminum
- Bulk Material Feed: 800mL (35.2oz)
- Tool Component Approvals: CE, REACH
- Standard Color: Black/Blue
- Customized versions on demand

Dimensions

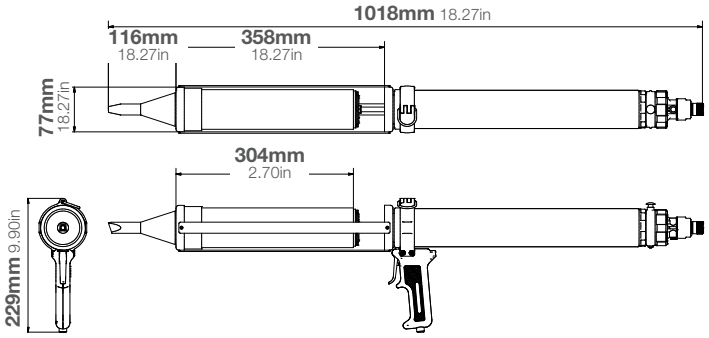

Product:
DP1C 800-bu-145-101

Article number:
161843

Packaging:
1 per Box

Matching MIXPAC™ cartridges

-

Compatible other

Bulk
400-4000mL

Conversion kits

-

Matching accessories

Grouting/pointing nozzle, dispenser tube
on pages 98-102.

COX™ Dispenser Accessories

Make the most of your dispenser with the following range of COX accessories.

	Name/Description:	Part Number:	Compatible with:
Nozzles			
	Twisty Nozzle Rotates 360° and is suitable for all dispensers manual, pneumatic and battery. Fits onto a standard cartridge thread and can be used in combination with the nozzle extension (sold separately).	2N1215 165791 (pack 10)	All COX dispensers except: Ultrapoint
	Nozzle Extension For those particularly tight and hard to reach spaces. Fits onto a standard cartridge thread and can be used in combination with the twisty nozzle (sold separately).	2N1216 165792 (pack 10)	All COX dispensers except: Ultrapoint
	9mm / 3/8" Blue Nozzle Plastic threaded nozzle produces a 9mm bead and has no graduation markings. Plastic nozzle holder and 'O' ring required (7N2007 - sold separately).	159112	PowerFlow

Name/Description:	Part Number:	Compatible with:

COX™ Dispenser Accessories

Make the most of your dispenser with the following range of COX accessories.

	Name/Description:	Part Number:	Compatible with:
General accessories			
	Bayonet Cap Metal cap complete with nozzle holder and leather seal, accommodates COX threaded nozzles	158935	UltraFlow Bulk
	Pointing & Grouting Dispenser Tube Replacement plastic tube	158178	Ultrapoint
	Plastic Two Start Cap Spare black plastic front cap. To use with clip-on nozzles for sachet and bulk. Screw-in nozzles can be used in conjunction with a nozzle holder and 'O' ring (7N2007 - sold separately).	158187	Most ø50mm barrelled dispensers with two start thread
	COX Ladder Hook Kit Black plastic ladder hook (incl. fixing) that allows you to hang the dispenser onto a ladder or the tool belt.	176510	PowerFlow UltraFlow Ultrapoint
	Nozzle Adaptor (BSP to knuckle thread) Black plastic nozzle adaptor to be used in conjunction with a nozzle holder for sachet dispensing. Standard shop bought (cartridge) nozzles fit onto the front thread.	166673	All COX cartridge dispensers
	MK1 Nozzle Holder & Viton 'O' Ring Black plastic nozzle holder with rubber 'O' Ring to be used in conjunction with threaded COX nozzles for sachet use. Fits into the black plastic front cap.	161994	All COX sachet dispensers
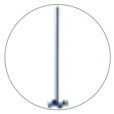	**Turbine Mixer** Epoxy coated steel mixer provides fast and efficient mixing, as material spins across horizontal plate and is propelled through battlements where it is dispersed.	159129	Ultrapoint

COX™ Dispenser Accessories

Make the most of your dispenser with the following range of COX accessories.

	Name/Description:	Part Number:	Compatible with:
Battery dispenser accessories			
	Complete Spreader Head Assembly Spreader head with ø50mm (2") cap and nozzle, disposable spreader tube included	176945 (190mm) 176948 (300mm) 176952 (400mm)	All standard ø50mm barrelled battery and pneumatic dispensers
	Spreader Head 190mm 300mm 400mm	**Bracket / Tube** 158739 / 158827 158740 / 158828 158741 / 158829	ElectraFlow Plus FloorFix
	Universal Battery Charger 10.8V	175931 83002-L (US)	EasiPower Plus
	Lithium-ion Battery 10.8V	163080 83001-L (US)	EasiPower Plus
	Battery Charger Battery charger for 2.0Ah batteries.	163517 (EU) 165577 (UK) 165572 (US)	ElectraFlow Plus
	Lithium-ion Battery Lithium-ion battery,18V 2.0Ah options available	175925 2.0Ah 163515 2.0AH (US)	ElectraFlow Plus
	Charger Cable UK, US and EU plug options available	170283 (UK) 158193 (US) 158194 (EU)	EasiPower Plus

COX™ Dispenser Accessories

Make the most of your dispenser with the following range of COX accessories.

	Name/Description:	Part Number:	Compatible with:
	Standard Nut and Tail Airline/Hose Connector option	158849	JetFlow AirFlow
	European Quick Release Airline/Hose Connector option	160431	JetFlow AirFlow
	American Quick Release Airline/Hose Connector option	158850	JetFlow AirFlow

Other products

	SoloClamp 100 (4”) A unique single handed operation product with 1.7kN clamping force, available in 100mm and the choice of acetal or metal jaws. Blue color (grey for US).	Metal: 177960 Acetal: 177959	-
	SoloClamp 150 (6”) A unique single handed operation product with 1.7kN clamping force, available in 150mm and the choice of acetal or metal jaws. Blue color (grey for US).	Metal: 177966 Acetal: 177965	-
	2 Gallon Follower Plate (2” Opening) For use with bulk loading dispensers. Works with straight and tapered pails. Pull rod included.	159150	All bulk dispensers
	5 Gallon Follower Plate (2” Opening) For use with bulk loading dispensers. Works with straight and tapered pails. Pull rod included.	159151	All bulk dispensers
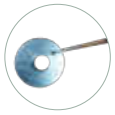	**Follower Plate (152mm/6.9in)**	175948	All bulk dispensers (UK only)
	Aluminum Pull Handle	7H1001 (US only)	All COX dispensers with Interchangeable T-Rod
	Support Handle	159100	All 2” barrel dispensers

COX™ Dispenser

Warranty Statement

COX dispensers offer a (2) year manufacturing warranty effective at the date of invoice.
COX will repair or replace any product which examination proves to be a manufacture defect.
With the exception of: COX™ EasiFlow™ and MidiFlow™ dispenser ranges which have a warranty for one (1) year from the date of invoice.

Limitations:

This warranty does not cover:

1. Repairs made or attempted by other than Sulzer Mixpac (UK) or Authorized Service Centre
2. Normal wear and tear
3. Misuse
4. Improper maintenance
5. Continued use after partial failure
6. Tools that have been modified or used with improper accessories

Should a problem develop while still under warranty, return the complete product to a COX Service Center or Sulzer Mixpac (UK) freight prepaid and insured. If inspection shows the problem has been caused by a defect in manufacture, all repairs, or a replacement will be made, at no charge and the product will be returned, transportation prepaid. No other warranty, written or verbal, is authorized.

The repair and replacement remedies described herein are exclusive. In no event shall Sulzer Mixpac (UK) be liable for any incidental, special, or consequential damages, including loss of profits, loss of use or loss of production.

This warranty is in lieu of all other warranties, expressed or implied including without limitation the implied warranties of merchantability and fitness for a particular purpose, which are expressly disclaimed.

SULZER

Dispensing Expertise

Headquarters / Europe

Sulzer Mixpac Ltd
Ruetistrasse 7
9469 Haag, Switzerland
phone +41 81 414 70 00
fax +41 81 414 70 0
mixpac@sulzer.com
www.sulzer.com

USA, South America, Canada and Mexico

Sulzer Mixpac USA Inc.
8181 Coleman Road
Haslett, MI 48840, USA
phone +1 800 822 8114
aps_haslett_sales@sulzer.com
www.coxdispensers.com/us

UK and Ireland

Sulzer Mixpac (UK) Ltd.
1 Tealgate, Charnham Park, Hungerford
Berkshire, RG17 0YT, United Kingdom
phone +44 (0)1488 647 800
coxsales@sulzer.com
www.coxdispensers.com

Asia Pacific

Sulzer Mixpac China
68 Bei Dou Lu, Minhang
Shanghai 200245, China
phone +86 21 6430 66 68
mixpac@sulzer.com
www.sulzer.com

Legal Notice: This brochure is a general presentation. The information contained in this publication is believed to be accurate and reliable but is not to be construed as implying any warranty or guarantee of performance. We waive any liability and indemnity for effects resulting from its application. Directions for use and safety are given separately. All information herein is subject to change without notice. Sulzer owned photography and imagery from this document, our website and other sources may be used only with written consent. Contact Sulzer for permission.
Copyright © 2021 Sulzer Mixpac Ltd. All rights reserved.

APS_AD_COX_1C_03.21_en